INDOOR TANNING EQUIPMENT

Care, Use and Installation

Instructions

The Big Bear - V9i

The Big Bear - 69 UPPi

Starflight X-Press - V6i

Starflight X-Press - 57 UPPi

PC MARKETING
1040 WILT AVENUE
RIDGEFIELD, NJ 07675

1-800-FAST TAN

Preface

Your unit has been built in accordance with the latest state of the art technology. Persons installing the unit, placing it into operation, operating, maintaining and repairing it must read and understand the operating instructions and especially the user safety instructions before the unit is used for the first time.

TABLE OF CONTENTS

1. USER INSTRUCTIONS 4-8

1.1 Before Placing in Operation 4
1.2 Placing the Unit in Operation 4
1.3 Safety / Warnings 4-7
1.4 Proper Operation 7
1.5 Product Liability 7
1.6 Emergency Procedure 7
1.7 Explanation of Danger Symbols 7-8
1.8 Location of Person Using Unit 8

2. OPERATION / INFORMATION FOR THE USER OF THE UNIT 8-9
2.1 Start of Tanning 8
2.2 Important Technical Details 8
2.3 Interior Tanning Space 8
2.4 Cleaning the Acrylic Sheets 9

3. INSTALLING THE UNIT 10-14
3.1 Installation Site and Delivery Condition 10
3.2 Installation and Assembly 10-13
3.3 Connection of Air Outlet 13-14
3.4 Electrical Connection 14
3.5 Remote Timer Control 14

4. PLACING INTO OPERATION 15
4.1 Technical Data and Dimensions..... 15
4.2 Before Placing the Unit into Operation 15
4.3 Placing the Unit into Operation for the First Time 15

5. CLEANING - IMPORTANT INFORMATION FOR THE OPERATOR .. 16

6. MAINTENANCE AND REPAIR 16-20
6.1 Changing the Acrylic Sheet 17
6.2 Changing the Lamps of the Constellation (Big Bear) 18
6.3 Maintenance of the Face Tanners 18-19
6.4 Changing the Tanning Lamps 19-20
6.5 Changing the Filters 20

7. NOTES 21

8. GENERAL TROUBLE SHOOTING GUIDE 21-22

9. SPECIAL ACCESSORIES 22-23
9.1 Remote Timing Controls 22
9.2 Installing the Air Conditioning Unit 23

FIGURES 1 and 2 24

FIGURES 3 and 4 25

FIGURES 5 and 6 26

FIGURES 7, 8 and 9 27

WIRING DIAGRAMS 28

1 SAFETY INSTRUCTIONS

1.1 Before installation and placing in operation, the safety instructions and the operating instructions must be carefully read and observed.

1.2 Before the unit is placed in operation, the local safety regulations and the safety instructions must be complied with.

1.3 **DANGER - ULTRAVIOLET RADIATION** Follow instructions. Avoid overexposure. As with natural sunlight, overexposure can cause eye and skin injury and allergic reactions. Repeated exposure may cause premature aging of the skin and skin cancer. **WEAR PROTECTIVE EYEWEAR: FAILURE TO DO SO MAY RESULT IN SEVER BURNS OR LONG-TERM INJURY TO THE EYES.**

Therefore, you must observe the following safety instructions:

The ultraviolet radiation is very intense. DO NOT look at the tanning lamps.

While tanning, close your eyes, and always use the protective eyewear that is supplied.

Before tanning, always remove jewelry.

DO NOT tan more frequently than once every two days.

For recommendations about exposure times and recommended frequencies, please see our RECOMMENDED EXPOSURE SCHEDULE, which is enclosed with every unit.

RECOMMENDED EXPOSURE SCHEDULE

SKIN TYPE	WEEK 1 1ST-3RD SESSIONS	WEEK 2 4TH-6TH SESSIONS	WEEK 3 7TH-10TH SESSIONS	WEEK 4 11TH-15TH SESSIONS	WEEK 5 SUBSEQUENT SESSIONS
II - FAIR	3 MIN	5 MIN	8 MIN	10 MIN	12 MIN
III – AVERAGE	4 MIN	6 MIN	8 MIN	10 MIN	12 MIN
IV - BROWN	4 MIN	8 MIN	10 MIN	12 MIN	12 MIN
V- DARK BROWN	4 MIN	8 MIN	10 MIN	12 MIN	12 MIN

Tanning can begin on a regular basis (allowing 48 hours between sessions). An appearance of tanning normally occurs after a few exposures and maximizes after four (4) weeks of exposure following the recommended exposure schedule

for your skin type. In order to provide for maintenance of a tan, a maximum of two (2) weekly 15 minute sessions is recommended from the fifth week onward.

USE PROTECTIVE EYEWEAR WHENEVER THE EQUIPMENT IS ENERGIZED. READ THE INSTRUCTION BOOKLET BEFORE USING THIS PRODUCT.

WARNING:

If you have been diagnosed by a physician as being allergic to the sun or are currently taking photosensitive medications, consult your physician before using this product.

Certain drugs - particularly those designed to enhance photosensitivity - may cause individuals under their influence to experience adverse effects, and those people should avoid exposure to UV sources of all kinds. Doctors will advise persons taking these drugs of possible adverse effects.

It is recommended that only one person at a time use the tanning system. Use protective eyewear while tanning. Protective eyewear is provided with each unit sold.

Occasionally, persons, using the tanning system will experience a slight reddening of the skin - usually in small patches - after the second or third session. This redness is often accompanied by an itching sensation. This is nothing more then a heat “rash” caused by heat from the lamps within the system. It is generally very limited and caused by constant contact of the skin with the acrylic surface. It will go away within approximately 24 hours and should not reappear. This rash can be lessened or prevented by turning over occasionally during sessions in the unit, and by applying moisturizing lotion to the affected area after the tanning session is complete.

CAUTION

WHILE THERE IS NO IMMEDIATE CLINICAL EVIDENCE REGARDING UVA EXPOSURE AND ITS EFFECTS UPON EXPECTANT MOTHERS, IT IS STRONGLY ADVISED THAT EXPECTANT MOTHERS BE DISCOURAGED FROM USING THIS PRODUCT.

EXPOSURE TIMES AND FREQUENCIES

Melanin, the brownish pigment produced by special cells in the base layers of the skin determines the individuals ability to tan. As the skin is exposed to ultraviolet rays, the melanin is activated and combines with protein cells that rise to the skin’s surface, thus producing a tan. The amount of melanin in your body determines how quickly and darkly you can tan.

NOTE

THE TAN PRODUCED BY THE UNIT IS A DEEP, RICH "COSMETIC" TAN. HOWEVER, REGARDLESS OF HOW MUCH AN INDIVIDUAL MAY TAN WITH THIS UNIT, IT WILL NOT PROVIDE ADEQUATE PROTECTION AGAINST OVEREXPOSURE TO NATURAL SUNLIGHT OR UVB TANNING SYSTEMS.

SKIN TYPE II - THIS IS THE INDIVIDUAL THAT USUALLY BURNS EASILY AND SEVERELY, TANS MINIMALLY OR LIGHTLY AND PEELS.

SKIN TYPE III - OFTEN REFERRED TO AS "AVERAGE" COMPLEXION, BURNS MODERATELY AND TANS ABOUT AVERAGE.

SKIN TYPE IV - THIS INDIVIDUAL BURNS MINIMALLY, TANS EASY AND ABOVE AVERAGE WITH EACH EXPOSURE.

SKIN TYPE V - THIS INDIVIDUAL RARELY BURNS, TANS EASILY.

RECOMMENDED EXPOSURE SCHEDULE

SKIN TYPE	WEEK 1 1-3RD SESSION	WEEK 2 4-6TH SESSION	WEEK 3 7-10TH SESSION	WEEK 4 11-15TH SESSION	WEEK 5 SUBSEQUENT SESSION
II – FAIR	3 MIN	5 MIN	8 MIN	10 MIN	12 MIN
III – AVERAGE	4 MIN	6 MIN	8 MIN	10 MIN	12 MIN
IV – BROWN	4 MIN	8 MIN	10 MIN	12 MIN	12 MIN
V - DARK BROWN	4 MIN	8 MIN	10 MIN	12 MIN	12 MIN

No two individual skin tones are the same. A tan to one person may be different to another, and session length may vary. It is recommended that, following a tanning session, a skin moisturizer be applied. This promotes a smoother more even looking tan. Equally important - many facial make-ups have oil bases and should be removed prior to each tanning session.

NOTE

SINCE THE BACK AND STOMACH AREAS OF THE BODY WILL RECEIVE THE MAJORITY OF THE TANNING RAYS, IT IS RECOMMENDED THAT INDIVIDUALS SPEND ONE HALF OF EACH SESSION LYING ON EACH SIDE OF THE BODY TO ACHIEVE A FULL-BODIED TAN.

SINCE YOUR UNIT WILL CAST OFF SOME HEAT, IT IS RECOMMENDED THAT A SMALL FAN BE USED TO IMPROVE AIR CIRCULATION DURING SESSIONS. LIKEWISE, ADEQUATE VENTILATION OF THE ROOM OR BOOTH HOUSING THE UNIT IS REQUIRED FOR COMFORTABLE OPERATION.

WARNING

COMMERCIALLY AVAILABLE CREAMS, LOTIONS AND OILS CONTAIN SUNSCREENS WHICH FORM A PHYSICAL BARRIER ON THE SKIN THAT PREVENTS THE UVA RAYS FROM PENETRATING AND INDUCING A TAN. IT IS RECOMMENDED THAT YOU USE ONLY CREAMS, OILS OR LOTIONS THAT **DO NOT CONTAIN POLYETHYLENE/GLYCOL LAURATE OR POLYETHLENE/GLYCOL MONO LAURATE** AND ARE DESIGNED FOR USE WITH INDOOR TANNING EQUIPMENT. FAILURE TO COMPLY WITH RECOMMENDATIONS AND WARNINGS STATED ABOVE MAY VOID THE MANUFACTURER'S WARRANTY.

THIS UNIT **MUST NOT** BE USED IF THE TIMER IS FAULTY OR IF A FILTER GLASS IS BROKEN.

1.4 Proper Operation

All units are intended solely for tanning in the interior of buildings. Operate the unit only in places where there is no risk of hazard, and only in dry rooms. The rooms must be well ventilated (adequate air inflow and outflow). If the unit is operated in a tanning salon, extremely strict hygiene must be ensured both on the unit and in the room. Any type of use not complying is improper, and the manufacturer will not accept liability for any resulting damage or liability. Proper operation also includes compliance with the operating, maintenance and repair conditions specified by the manufacturer. Maintenance work, repair work should only be performed by a qualified service technician or by persons authorized by PC Marketing, Inc. If unauthorized modifications are made on the units, the manufacturer will not accept liability for any resulting damage or injury.

1.5 Product Liability

The unit may only be operated in the proper manner. If it is operated in an improper manner, the user assumes sole responsibility. In such cases, the manufacturer cannot accept any liability.

1.6 Procedure in an Emergency

Switch off the electrical supply to the unit by operating the main power switch or circuit breakers, and secure the unit to prevent it from being switched on again without authorization.

1.7 Explanation of Danger Symbols

! WARNING **!**
In these operating instructions, we have used this symbol to mark all items that relate to operating safety.

➔ IMPORTANT !
In these operating instructions, we have used this symbol to mark all items that contain essential information for operating the unit.

1.8 Location of the Person Using the Unit

In front of the unit and in the unit's interior tanning space.

2 OPERATION / INFORMATION FOR THE USER OF THE UNIT

2.1 Start of Tanning

! Observe the recommended exposure chart. Do not exceed the tanning time recommended for your skin type. Never tan if you already have been over exposed. When tanning you must use protective eyewear. You may stop the tanning session at any time by means of the OFF switch (3) on the operating panel.

2.2 Important Technical Details

➔ Important information ! - You <u>must</u> read this!

➔ Desired air conditioning (switches 5 and 103) on the operating panel. Here you select how much cooling air is circulated into the interior tanning space.

■ Fans - to cool down the unit, the fans continue to run for approximately four minutes after the unit is turned off.

2.3 Interior Tanning Space

Lie down on the unit

! DO NOT place any part of your body on the longitudinal bars of the lounge; there is a danger of crushing.

Pull the canopy down by means of the handles (1), which you can easily reach with your left hand.

■ Face nozzles - through the air nozzles (102, Figure 4) cooling air is blown over the facial area. Turn the air nozzle into the position you want. When you rotate the air nozzle 90 degrees, it is closed.

Operating Panel

! With the OFF switch (3) on the operating panel, you can stop the tanning session at any time.

The 2 digit LED display (2) counts up the time in one minute increments, from the time the unit is turned on. It displays the amount of time you have spent tanning. At the end of the session, the unit switches itself off and the display reads “0.” During tanning, you can stop the session by means of the OFF switch (3) and you can start it again by means of the switch with the clock symbol (4). The session time continues to run during this interruption, i.e. the display continues to count. By means of the rocker switch with the fan symbol (5) you can select your desired air conditioning during tanning. This rocker switch (5) controls the inflow of cooling air from the InterCooler Superfan (7) situated at the foot end of the bed. The rocker switch with the face/fan symbol (103) controls the inflow of cooling air from the face nozzles (102). The setting of the rocker switch selects the intensity of the inflow of cooling air.

Middle Setting	- Inflow of cooling air OFF
Symbol: Circle half filled in	- Half inflow of cooling air
Symbol: Circle filled in	- Maximum inflow of cooling air

By means of the rocker switch with the face/sun symbol (6), the small facial fluorescent lamps (U-P-P models) are turned on to supplement the standard lamps.

2.4 Cleaning the Acrylic Sheet: Use Approved Cleaner only !

! Always ensure strict hygiene.

After every use, the acrylic tanning surfaces must be disinfected and cleaned. Use cleaning materials in accordance with the manufacture’s instructions. DO NOT pour or spill liquid over unit.

After every tanning session, clean the acrylic sheet with PC Marketing’s acrylic cleaner. When using the cleaner, spray it on the acrylic sheet, let sit for 30 to 60 seconds. Always dry it off with a clean cloth.

3 INSTALLING THE UNIT

! To install the unit, at least two persons are needed. The room in which the unit is to be installed must be well ventilated. There is a risk of overheating if proper air conditioning and exhaust is not installed in the tanning room.

3.1 Installation Site and Delivery Condition

All units are intended only for tanning in the interior of buildings. Operate the unit in areas where there is no risk of hazard and only in dry rooms. The rooms must be well ventilated.

3.2 Installation and Assembly

■ Dismantling the canopy

Raise the canopy by its front longitudinal bar, and take out the InterCooler Superfan and the headrest. Take off the large rear cover (45) by removing the covering caps (46), screws (47) and inserts (48).

➔ To do this, you must also remove the screws around the air outlet covers (78 and 80); these also join the cover (45) to the lift (28).

Remove the screws (105) completely, slacken the screws (106) slightly, and take off the cover (104). Unscrew the z-bracket with the rubber seal (103). Pull apart the two plug-in connections (57-107, 59-107). Release the cable clamps (108) and store them, together with the insulation (109), ready for installation later on. Remove the smaller cover (49) which is now visible below that. From the two holders (56, Figure 3) at the rear of the canopy, always unscrew the bottom two hexagon socket head screws (52) with washers (53), and lay these aside keeping ready for installation later on.

! DO NOT remove the top cheese-head screw (54) with locknut. By means of this screw, the canopy is suspended in the holders (56) of the lift.

Take the canopy off by pulling the cheese-head screw (54) over the holders (56).

■ Dismantling the lounge, pedestal and lift

Take off the front panel (18) by turning the slots (19) of the latches into the vertical position and tilting the front panel forward at the bottom. Remove the cover plate (35) from the pedestal by slightly slackening the screws (36), push the plate upwards, and take it off forwards over the screw heads. Pull the lounge drawer (38), the canopy drawer (37) and the large main drawer (110) out of the guide rails. Take off the lounge (two persons are needed for this). Working from the interior of the pedestal, remove the four hexagon socket-head screws (30) with washers (31) and the hexagon bolt (32) with the toothed washers (33) and nut (34). Again, keep these parts in a safe place ready for installation later on. Now carry the lift, pedestal, drawers and covers to the desired place of installation.

■ Installing the lift and pedestal.

Set up the lift (28), and position the pedestal (29) centrally and flush in front of the lift. Now, working from the interior of the pedestal, join the lift (28) and the pedestal (29) by screwing the four hexagon socket-head screws (30) with washers (31) back in again. Also screw the hexagon bolt (32) with toothed washers (33) and nut (34) through the adjacent sheet metal plates of the lift and pedestal. Push the canopy drawer (37) into the middle guide rail, the lounge drawer (38) into the bottom guide rail, and the main drawer (110) into the top guide rail.

➔ The main drawer is the drawer with the air break contactor and the capacitors.

Pull the white cable (39) from the main drawer to the right through the top opening in the side wall and through the cable clamp (40), which is situated on the right-hand side end cover of the pedestal, and from there to the outside. This cable is the main power cable. Pull the long gray cable (41) with the socket-housing of the main drawer through the top opening in the side wall into the right-hand cavity, then further along the rear wall of the pedestal through the opening of the lift between the two transverse bars (100) in the upward direction. Plug the short cable with the coupler (42) from the main drawer, into the coupler of the terminal block (43). Lay the small socket-housing with the designation 1 (111) and the small socket-housing with the designation 2 (112) through the opening in the side wall to the right into the free space. Pull the long gray cable (44) of the canopy drawer (37) through the middle opening in the side wall into the right hand cavity, and further along the rear wall of the pedestal through the opening of the lift between the two transverse bars (100) in the upward direction. Next, plug the coupler half (113) of the canopy drawer (37) and the coupler half (114) of the lounge drawer onto the coupler halves of the main drawer (111 and 112).

➔ The coupler halves are marked 1-1 and 2-2. Join the identical numbers together.

Lay the cable with socket (71) from the lounge drawer (38) to the right into the free space. This is intended for the connection to the lounge.

■ Installing the canopy

Raise the canopy and hold it above the lift, aligning the holes so that you can insert the heads of the cheese-head screws (54) into the holders (56) of the lift.

➔ To provide locking, screw the four hexagon socket-head screws (52) with washers (53) back in again, and be sure to tighten them securely.

With the two rubber buffers (98) beside the holding arm, adjust the distance between the longitudinal bars of the canopy and lounge (the upper stop and lower stop). However, this has been correctly set at the factory.

➔ If you nevertheless wish to adjust it: Screw the upper rubber buffer in only far enough to ensure that, when the canopy is open, the gas springs still have 15mm to go before they reach their stops.

Fasten the cover (49) with the inserts (61), screws (62) and covering caps (63). Screw the z-bracket with the rubber seal (103) back on again. Now plug the couplers of the cables (41 and 44), which you have guided upwards between the two traverse bars (100), into the connectors (57 and 59) on the canopy.

➔ The plug-in connectors are coded.

By means of the cable clamps (108), fix the cables (41 and 44) to the inside of the cover (49).

➔ Lay the insulation (109) under the cable clamps.

Fix the cover (104) again by screwing in the screws (105) and by tightening the screws (106). Fix the cover (45) from behind with the inserts, screws and (in some cases) the covering caps.

➔ Do not forget to tighten the screws (47) around the central air outflow holes, with the appropriate air outflow covers.

■ Installing the lounge

Hold the lounge over the pedestal in such a way that the centering pins (66) are at the back. Put the lounge onto the pedestal, aligning the centering pins into the holes (68) provided for them on the pedestal, and the lounge cable (69) falls into the right-hand cavity of the pedestal. Plug the connector (70) of the lounge cable into the socket part (71) of the lounge drawer.

➔ Switch the rocker switch (85) to coin/ remote operation or - if you wish to use the unit with the timer - switch it to clock operation (for important information about this see Chapter 9.1)

On the running-time meter (86), always read the existing total running time. Attach the cover plate (35) by pressing the round parts of the fixing screws. The cover plate is pulled into its final position by its own weight. Tighten the screws. Securely plug in the grounding cable (101) on the front panel (18). Insert the front panel (18) from below into the pedestal, and fix the front panel by turning the slots (19) of the latches (20) into the horizontal position.

■ Installing the InterCooler Superfan (Figure 2)

Put the InterCooler Superfan (7) centrally into the recess of the foot end cover of the lounge. By adjusting the knurled screws (58), adjust the height of the InterCooler Superfan so that its two air duct connections (112) are mating directly with the corresponding counterparts on the pedestal and on the end cover of the lounge. Screw the fan to the end cover of the lounge by means of the lugs (60). Plug the cable of the InterCooler Superfan (76) into the corresponding socket (77) on the pedestal.

3.3 Connection of the Unit's Air Outlet

The unit is designed in such a way that the heated cooling air is either blown into the room and is discharged from there via the room air extraction system, or is blow towards the rear or at the right hand side directly into the outside atmosphere via the central air-discharge connection which is present on each unit. In its delivered configuration, the unit is designed to blow the heated air into the room.

➔ However, direct discharge of air (central air discharge) is the most effective manner and is recommended by the manufacturer.

■ Direct discharge of air with the air outlet at the rear (Figure 1)

Replace the rear cover plate (78) by the connecting piece (79), and replace the slotted air discharge cover (80) at the side by the solid cover plate (78). If the hole in the wall cannot be made directly behind the connecting piece (79), the distance can easily be bridged with a flexible air duct. Fixing of the duct to the connecting piece (79) is done by means of a hose clamp.

■ Direct discharge of air with the air outlet at the side

Remove the slotted air discharge cover (80) of the side air-outlet. There, attach a connecting piece, and to that connect a flexible air duct by means of a hose clamp. The air discharge opening at the rear remains closed. By means of duct connecting pieces, a wall sleeve and automatic damper, route the air discharge duct into the outside atmosphere, or connect it to an air duct.

(You can obtain the connecting piece, flexible duct, clamps, wall sleeve and damper through your local hardware store or home center)

! Attention, important information ! You must follow these instructions to prevent overheating!

To avoid excessive resistance to the air flow, the flexible air duct should not be longer than 20 feet and should be laid so that any bends have as large a radius

of curvature as possible, and without kinks. If the air is discharged to the outside via a ventilation duct, it must be ensured that the flow resistance in the interior of the duct is as low as possible; if necessary, an additional fan might need to be installed in the duct. In this case, please consult with your HVAC contractor. The rate of discharge is about 1500 m^3 / hour; accordingly, fresh air must be allowed to enter the cubicle at the same rate. Therefore, you must provide fresh air openings in the wall of the cubicle, having unobstructed cross section of at least 1000 cm^2.

3.4 Electrical Connection

! Important: The electrical connection work should only be done by a qualified electrician. All wiring must conform with all local standards.

The unit is delivered with a power cable for connection to the appropriate power source as required for that particular model.

3.5 Remote timer control

The unit is equipped for connection to a remote timer system for central control.

■ Coding plug for connection to a remote timing system (Figure 2)

Insert the coding plug (87) with the cable, which is situated on the right-hand end face of the pedestal, into the special socket with retaining clip (88). This cable forms the connection to the remote or coin-operated system. The cable has four cores (phase, switched phase, neutral, ground). Therefore, the remote control system does not require a separate electrical connection. The remote system must be capable of handling an inductive load of up to 16 Amps.

4 PLACING IN OPERATION

4.1 Technical Data and Dimensions*

Designation	Starflight Express X-Press V6i	57 U-P-P-i	The Big Bear V9i	69 U-P-P-i
Power (W)	10,000	8,200	11,000	9,700
Operating Voltage	220V 60Hz Single Phase	220V 60Hz Single Phase	220V 60Hz Three Phase	220V 60Hz Single Phase
Amperage	50	50	42	50
Weight	800 lbs.	850 lbs.	850 lbs.	885 lbs.
Length with InterCooler	92 in.	92 in.	92 in.	92 in.
Width	54 in.	54 in.	54 in.	54 in.
Height Canopy Open	68 in.	68 in.	68 in.	68 in.

* We reserve the right to make technical changes

4.2 Before Placing in Operation

Before installation and placing in operation, the safety instructions and operating instructions must be carefully read and observed.

4.3 Placing the unit into operation for the first time

Before the unit is placed in operation, the local safety regulations and safety instructions must be observed. When the unit is completely installed, electrically connected and connected to the remote timing system (if applicable), it can be placed in operation.

! Instructions to the operator:

DO NOT place any malfunctioning units into operation.
Disinfect the acrylic shield with a UVT (ultraviolet transmitting) acrylic cleaner supplied by PC Marketing.
Provide protective eyewear and require their use during tanning.
Observe and follow recommended exposure schedule which lists skin type, exposure times and frequencies.
Keep operating instructions available at all times.
Display the safety instructions in a clearly visible manner in the tanning room.

5 CLEANING - IMPORTANT INFORMATION FOR THE OPERATOR

! Ensure extremely strict hygiene on the tanning unit and in its vicinity. Dust deposits reduce the tanning effect. DO NOT pour or spill liquids over the unit, so that no moisture can penetrate under the covers and into the electrical equipment. Use cleaning materials in accordance with manufacture's instructions. Follow the recommended waiting time for acrylic cleaners as per manufacture's instructions.

■ Frame

Clean the painted external surfaces of the unit with a slightly damp cloth; some detergent can be added to the water. DO NOT use abrasive materials. Stubborn dirt can be removed with a soft cloth and a biodegradable cleaning material.

■ Acrylic sheet

Use only the genuine PC Marketing acrylic cleaner, or approved equal. If cleaning materials other than the above are used, we cannot accept any warranty liability. When using the PC Marketing acrylic cleaner spray it on the acrylic sheet, let it sit for 30 seconds, and dry it off with a clean, dry cloth. Occasionally, also clean the side of the acrylic sheet facing the lamps. To do this, take the acrylic sheet off.

■ Reflector

When changing lamps, wipe the reflectors by means of a cloth moistened with alcohol.

6 MAINTENANCE AND REPAIR

! Always disconnect the unit from the power source.

The owner / operator of this unit must ensure that the unit is always operated in a perfect condition. Ensure regular maintenance and checking of all the technical equipment.

Only authorized technicians should work on this unit. Working procedures which jeopardize the safety of the unit must not be used. Always obtain genuine spare parts through PC Marketing. DO NOT operate the unit without the acrylics in place.

6.1 Changing the Acrylic Sheet

The acrylic sheets are produce and formulated from specially treated acrylic materials highly transparent to UV light. The process of forming and molding the acrylic sheets is done within an exact temperature controlled environment. Finally, the acrylics are annealed (oven baked) for longevity. This strict process of manufacturing can have no deviation.

➔ Therefore, when replacing acrylic sheets, please be aware that all suppliers DO NOT manufacture acrylic sheets the same. To be sure you are receiving genuine replacement acrylic sheets, contact PC Marketing.

When a replacement is delivered, the acrylic sheet is covered with a protective covering on both sides. Before installing in the tanning unit, pull off the protective covering. DO NOT operate the unit without the acrylic sheet as the cooling of the lamps cannot be assured.

■ Acrylic sheet on the lounge: installation and removal

Turn the latches (9) so that the slots are perpendicular to the end cover, and turn the other latches (10) so that the slots are parallel to the end cover. This releases the acrylic sheet. At the longitudinal side of the acrylic sheet, push the sheet backwards between the reflector and the side strut until the sheet is released on the opposite (front) longitudinal side. Tilt the sheet upwards slightly on the released side. Lift it out of the longitudinal groove on the other side too, and take it off. Remove the bars. Lift the lower acrylic sheet off. When re-installing, ensure that the lower acrylic sheet is lying against the stops, that the bars are sitting on the nipples of the lower acrylic sheet, and that the recess on the upper acrylic sheet is pointing towards the end cover at the foot end.

■ Acrylic sheet on the canopy: installation and removal

Release the holders (11) by turning them counter clockwise with a coin. Push the holders back in the axial direction. This releases the acrylic sheet. Press the acrylic sheet backwards towards the lamps and side strut until you can take the sheet out of the longitudinal groove on the opposite (front) side strut. Now tilt the sheet downwards slightly on the free side. Then lift it out off the longitudinal groove on the other side too. When re-installing, put the acrylic sheet into the longitudinal groove. Press the sheet back far enough towards the lamps and side strut so that it can be inserted on the opposite (front) longitudinal side too. Push the holders (11) towards the middle of the unit again; the lug of the rear mounted holder must engage in the recess on the acrylic sheet. Lock the holder by turning clockwise.

➔ Ensure that the acrylic sheet is lying in the grove of the holders (11).

6.2 Changing the lamps of the constellation (Big Bear models only)

! Turn off the power to the unit before changing lamps.

Over each lamp is a clear covering cap. This cap is lightly clipped in place. Insert a small screwdriver carefully between the body of the canopy and the edge of the covering cap, and lift the covering cap off. With the aid of the insertion tool, unscrew the defective lamp and install the new lamp.

➔ Always replace defective lamps in the constellation as soon as possible.

RELAMPING INSTRUCTIONS
REPLACEMENT LAMP TYPES
CAUTION: REPLACE ONLY WITH ORIGINAL LAMPS OR FDA APPROVED EQUIVALENT

LOUNGE: COSMEDICO - COSMOLUX VHR 160W BI-PIN (PART NO. 16150)

CANOPY: COSMEDICO - COSMOLUX VHR 140W BI-PIN (PART NO. 16180)

COSMEDICO - COSMOLUX VHR 160W BI-PIN (PART NO. 16150)

COSMEDICO - SHORT LAMPS LS 25W BI-PIN (PART NO. 10030)

HEREAUS NOBLELIGHT - 400W Q460Z4 (PART NO. 44005)

6.3 Maintenance of the Face Tanners

! The High Pressure face tanner can only be used with the two glass filter plates (90 and 91) in place; if these are damaged or missing, tanning **MUST NOT** take place ! **There is a danger of burns ! Danger of eye injury cause by excessive intensity!**

When the face tanner (89) has been running and is switched off and on again immediately, it may not light up again, and will not provide full power, since it requires a cooling down phase of about (4) minutes.

■ Changing the High Pressure Lamp

Take off the acrylic sheet in accordance with the previous description. Remove the cheese-head screw (92) on the glass filter plate holder (93). Tilt the glass filter plate holder down. Hold the filter plate holder with both hands, and push it towards the end cover so that it becomes detached. Grasp the high pressure lamp (94) by the rectangular end of the lamp, and pushing it in the longitudinal

direction into the holder (95) until it is released at the other end. Now pull it out in a downward direction.
➔ You must NEVER pull on the glass of the lamp.

Hold the new high pressure lamp by the end of the lamp only. Plug the lamp (94) into the holder (95). Push the holder back. Insert the new lamp.

! You must NEVER touch the glass of the high pressure lamp with your fingers.

If you have nevertheless touched it by accident, wipe off your fingerprints by means of a clean cloth moistened with alcohol.

➔ To obtain replacement tanning lamps for the high pressure facial tanners, please contact PC Marketing. No liability can be accepted if replacements other then genuine lamps, and starters are installed.

■ Cleaning the reflectors

Before you insert the new lamps, wipe the reflectors by means of a cloth moistened with alcohol.

■ Cleaning the glass filter plates

Unscrew the two cheese-head screws (96) on the filter plate holder (93). Take off the cover plate (97). Pull out the dark glass filter plate (91) and the clear glass filter plate (90). Clean both glass filter plates with warm water to which some detergent can be added. Wipe the glass filter plates dry with a clean cloth.

! When re-assembling : Dark glass filter plate - - on user's side !!
Clear glass filter plate - - on lamp side !!

! The face tanner **MUST NOT** be used without the glass filter plates!!

! Extreme care must be taken not to scratch the glass filter plates.

Re-insert the filter plate holder (93) with the cleaned glass filter plates. Screw the filter plate holder in place again by means of the screw (92).

6.4 Changing the Tanning Lamps

In accordance with previous description, remove the acrylic sheet. Rotate the tanning lamp (12) in either direction until the contact pins (13) are visible in the groove of the holder (14). Pull the lamp out. Clean the reflectors by means of a cloth moistened with alcohol. Hold the new tanning lamp horizontally so that the contact pins are vertically above one another. In this position, press the tanning

lamp into the holder. Rotate or twist the tanning lamp 90 degrees so that the notch (15) in the metal ring at the end of the lamp is facing upwards and the brighter reflector side of the lamp is facing towards the unit.

■ Changing the short lamps (U-P-P units only)

Take off the acrylic sheet (27) as previously described. Rotate the short lamp (16) in either direction so that one contact pin (18) goes into the grove (17) (which is open at the bottom) of the holder. Pull the short lamp out downwards. Hold the new short lamp horizontally so that the contact pins (18) are vertically above one another. In this position, align the lamps into the groove which is open at the bottom. Tilt the lamp so that one contact pin fits firmly in the wing of the groove. Rotate the lamp so that the second contact pin snaps into the other wing of the groove.

6.5 Changing the Filters

The air for cooling the unit enters it through micro filter pads. Lint, hair, dust particles etc., are filtered out there, so that the internal parts of the unit, such as lamps etc., do not have to be cleaned often. After prolonged use, these filtered-out particles clog the filters and thus impair the cooling of the unit. Therefore, you must occasionally replace the filter pads to prevent overheating of the unit. The replacement interval is dependent upon operating times and local environmental conditions.

➔ You must check the filters after every 200 hours of operation; the filters must not be more then half clogged.

Obtain genuine filter pads through PC Marketing or your authorized distributor only.

■ Changing the filter on the lounge (Figure 2)

Take off the front panel (18) by turning the slots (19) of the latches (20) into the vertical position and then tilting the front panel forward at the bottom. The filter pad (21) is fastened on the inside of the front panel by means of wire clips (22). Pull out the wire clips and change the filter pad.

■ Changing the filters on the canopy (Figure 3)

Take off the top cover (23). To do this, push one longitudinal side of the cover towards the middle of the unit until the cover is released on this side. Tilt the cover upwards on this side, pull it out on the other longitudinal side, and take it off. The filter pads are secured with Velcro strips. Simply pull them off and change them.

7 NOTES

■ Burning in the lamps

Initially, the lamps have slight color differences. This phenomenon disappears after a short time. The lamps shine less brightly at the ends. This is due to physical reasons and is not a defect in the lamps.

 Replacing the tanning lamps

The output of the lamps gradually decreases over time, and this effect cannot be visually detected. PC Marketing recommends that fluorescent lamps should be replaced after approximately 500 hours of operation.

8 GENERAL TROUBLESHOOTING GUIDE

! Before you begin maintenance and repair work, you must disconnect unit from the main power supply. Repairs should only be performed by authorized persons. Safety devices must no be removed or disabled.

■ Dark spots at the ends of the lamps

If dark spots are present at the ends of the lamps when they are off, this will not affect the performance of the unit. However, as a precaution, replace the starter.

 One or more lamps are not lighting (change of starter)

Take off the acrylic sheet of the lounge or canopy. Check whether the lamp in inserted properly. Then check that the starter is seated properly.

Starter - Tanning Lamp in lounge - On lamp holders at the head end; take off the acrylic sheet (8)

Tanning Lamp in canopy - On lamp holders at the foot end; take off the acrylic sheet (27)

Short Lamps in canopy - Take off the covers (23 and 26)

Remove the starter for the lamp that is not lighting but turning it counter clockwise, and then put it back in again by turning it clockwise. If the lamp still does not light, insert the starter from a working lamp. If this is not successful, the lamp must be checked. Insert the lamp that is not lighting into a holder where a lamp does light. If the lamp does not light, it is defective and will have to be replaced. If it does light, there is an electrical short in the unit.

! Any electrical shorts should be checked by an authorized technician approved by PC Marketing.

■ The canopy or the lounge gets too hot.

Check whether the air intake filters (filter pads) are clogged. In the case of units whose heated cooling air is not removed via the central air-discharge connection, check whether the open, slotted air-discharge cover (80) is in place on the end cover of the lift. In the case of units with direct discharge of air, ensure that the heated cooling air is passed into the outside atmosphere without excessive resistance. There must not be excessive hindrance of the air flow, either in the flexible duct or in the ventilation duct, because this will case overheating of the unit.

! This check should be performed by an authorized technician approved by PC Marketing.

■ Adjusting the opening force (Figure 3)

The adjustable spiral springs situated in the rear left-hand part of the lift control the opening force with which you open and close the canopy. Take off the rear cover (45) by removing the covering caps (46), screws (47) and inserts (48). Also remove the cover (49). The two spiral springs (81) are inserted in eye-bolts (82) at the bottom. Adjust the two eye-bolts with the aid of the hand wheel (25);

➔ Downwards - - closing force increases
Upwards - - closing force decreases

■ Replacing the spiral springs

Take off the covers (45,49 and 104). Thread a piece of rope into the upper lug of the spiral spring (81). With the aid of the rope, stretch the spiral spring upwards, and detach it. Insert the new spiral spring into the eye-bolt (82), and pull it up by means of the rope. Fasten the new spring in the hole on the holder.

9 SPECIAL ACCESSORIES

9.1 Units not controlled by remote timing controls

! Disconnect the unit from the main power supply

Remove the two covers (18 and 35) and switch the rocker switch (85) to clock operation. If you modify the unit later for non controlled operation it is also necessary to switch two switches on the circuit card behind the operating panel in the interior tanning space. Take off the acrylic sheet (27) and working from inside, release the two knurled nuts with which the operating panel is fastened in

the end cover. Pull the operating panel out in a downward direction. Detach the circuit card from the operating panel and switch the two switches (blue body) according to the table in Figure 9. Carefully re-install the circuit card, the operating panel and the acrylic sheet.

➔ Unplug the coding cable.

By several pressings of the button with the clock symbol (4) on the operating panel, you can set the exposure time. If you would like to switch the unit off before the set time, or if you have made a mistake while setting the time, press the OFF button (3).

9.2 Installing the air conditioning unit (99 - Figure 2)

! Disconnect the unit from the main power supply

Take off the front panel and working from inside, remove partition (83) situated in the free space of the air conditioning unit. Plug the coupler of the air conditioning unit (111) into the coupler in the pedestal, and push the air conditioning unit into the free space. Re-assemble the unit

➔ If you remove an air conditioning unit, the partition (83) must be installed.

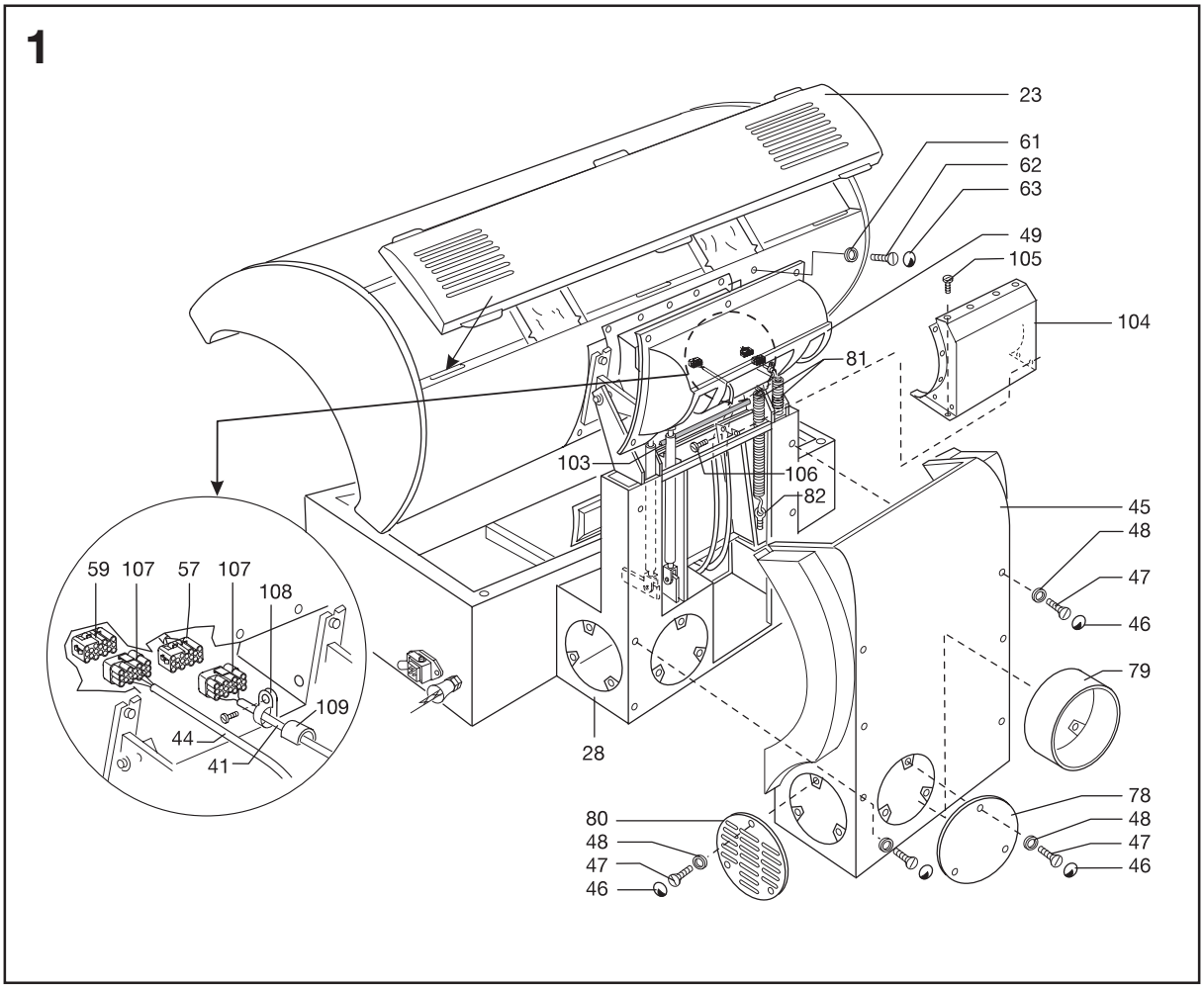
1
23
61
62
63
49
105
104
81
103
106
82
45
48
47
46
79
78
48
47
46
80
48
47
46
28
59
107
57
107
108
109
44
41

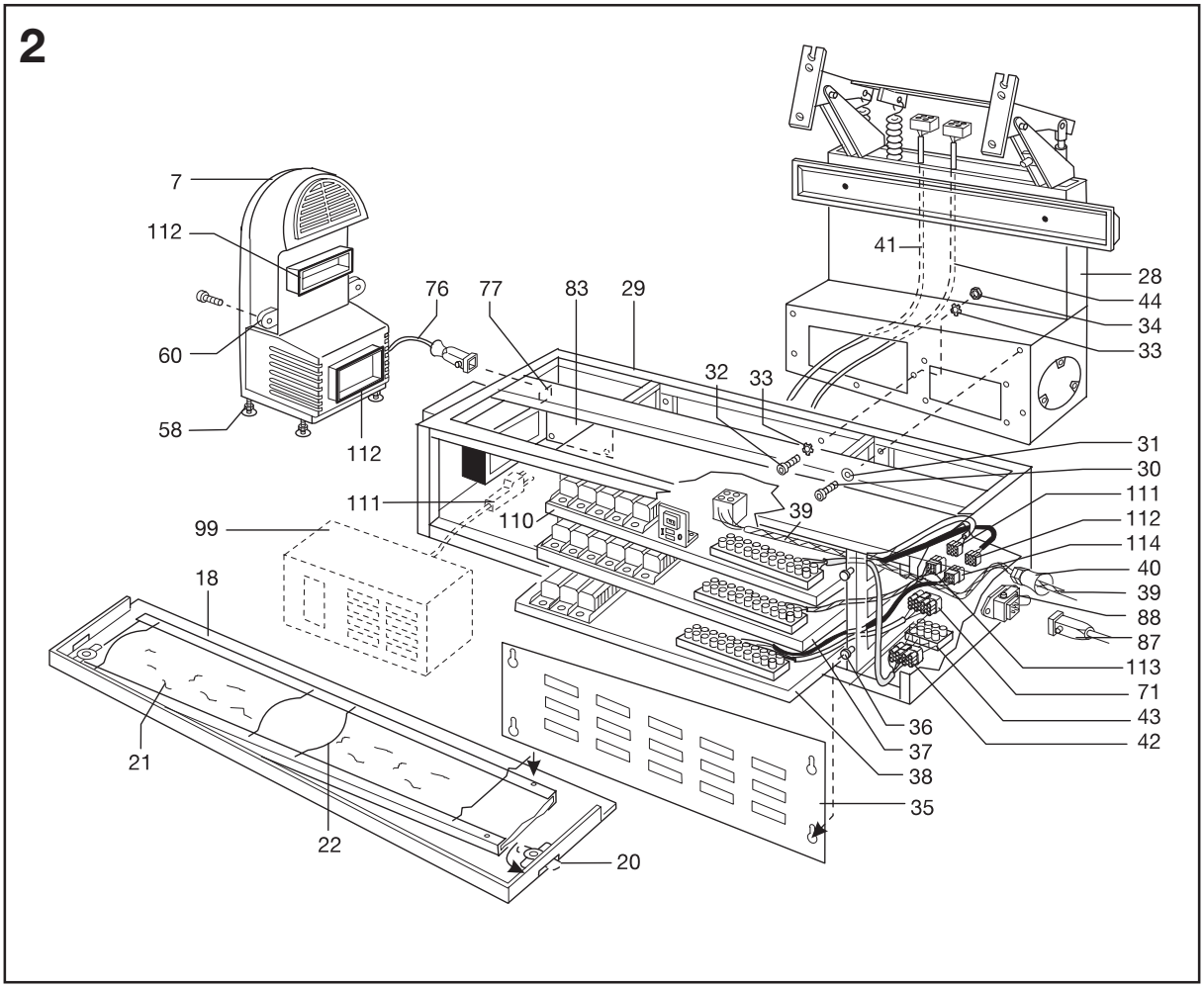
2
7
112
60
58
112
76
77
83
29
41
28
44
34
33
32
33
31
30
111
112
114
40
39
88
87
113
71
43
42
36
37
38
35
111
110
39
99
18
21
22
20

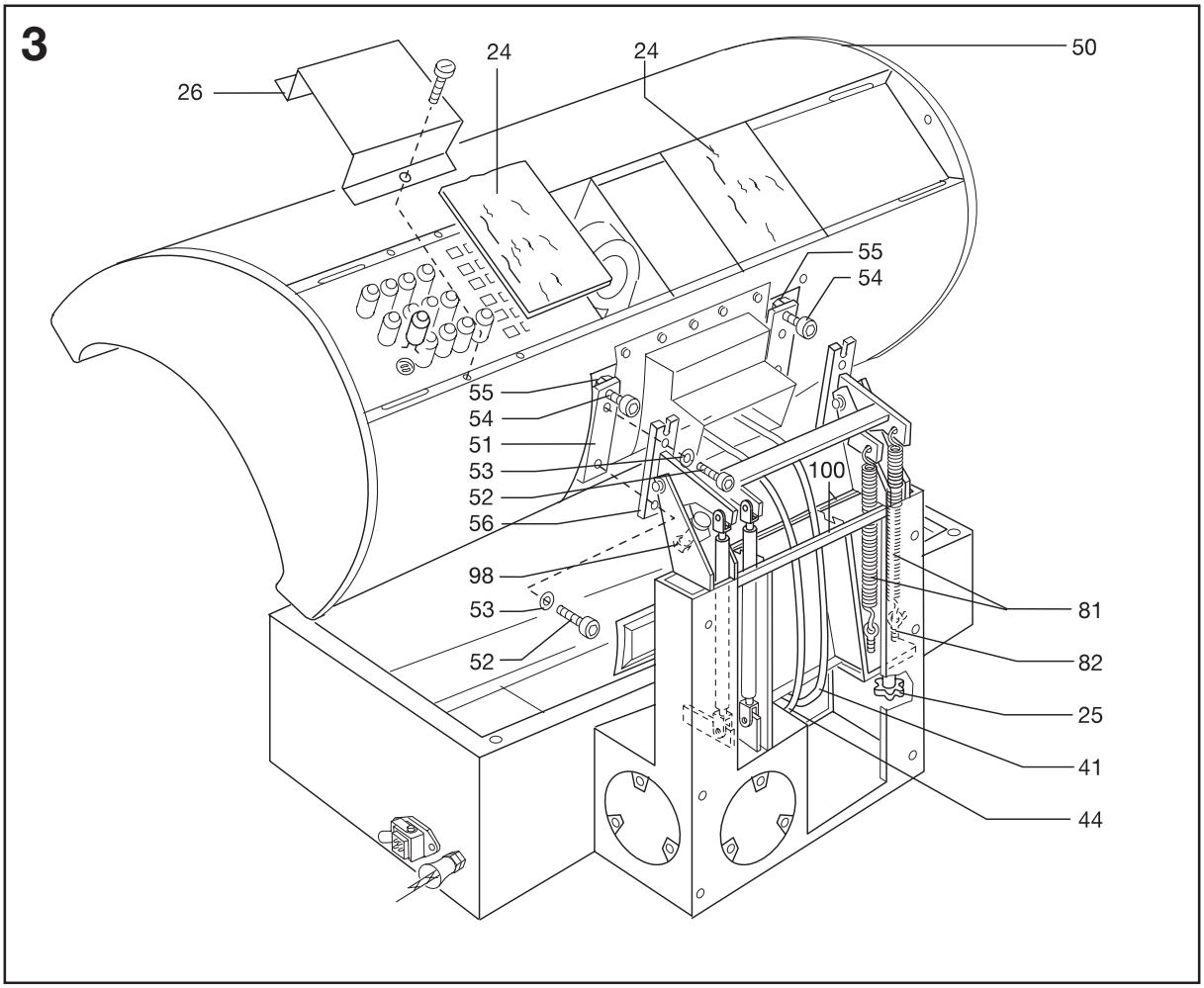
3
26
24
24
50
55
54
55
54
51
53
52
56
100
98
53
52
81
82
25
41
44

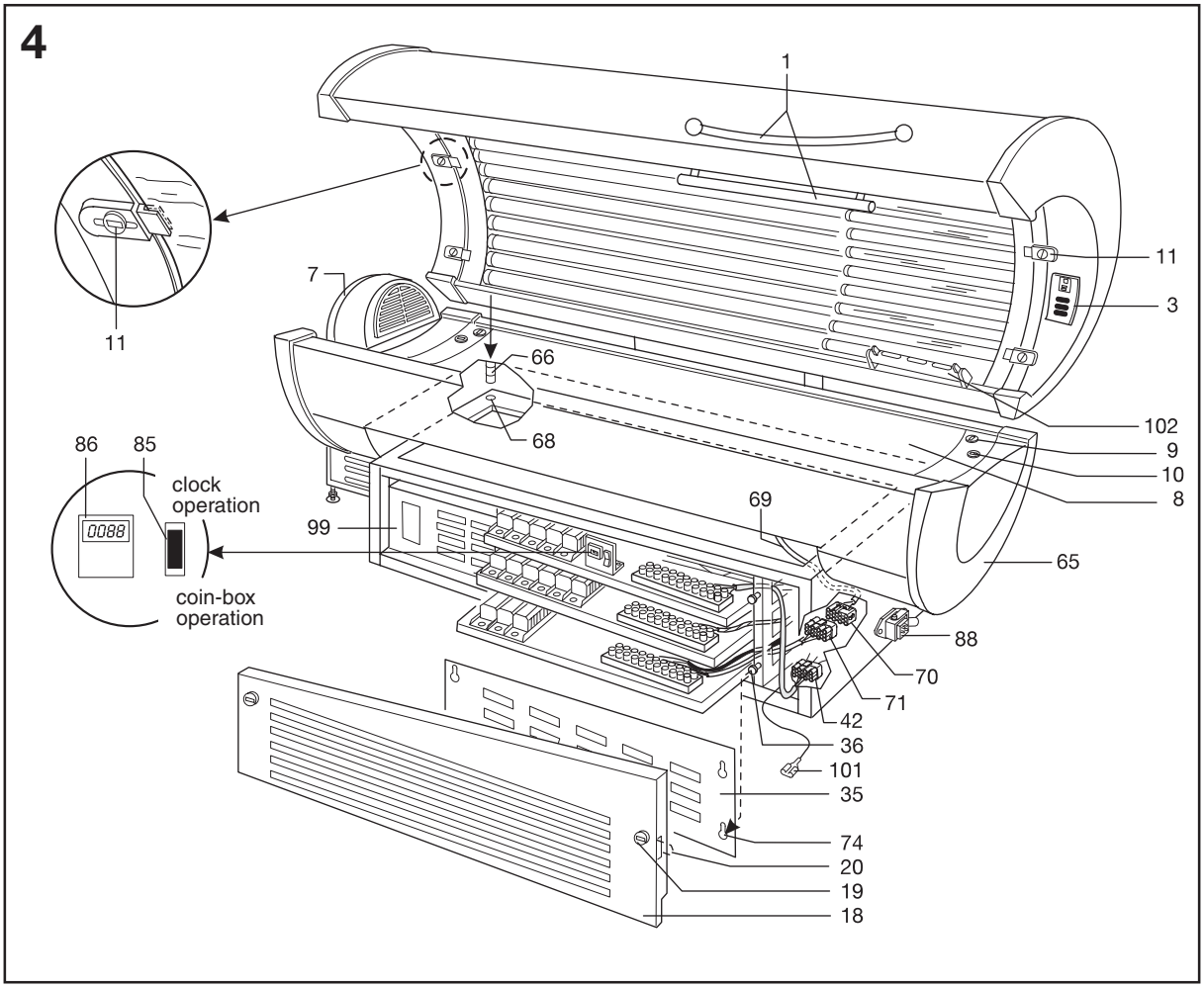
4
1
11
7
11
3
66
68
102
9
10
8
86
85
clock
operation
0088
coin-box
operation
99
69
65
88
70
71
42
36
101
35
74
20
19
18

5

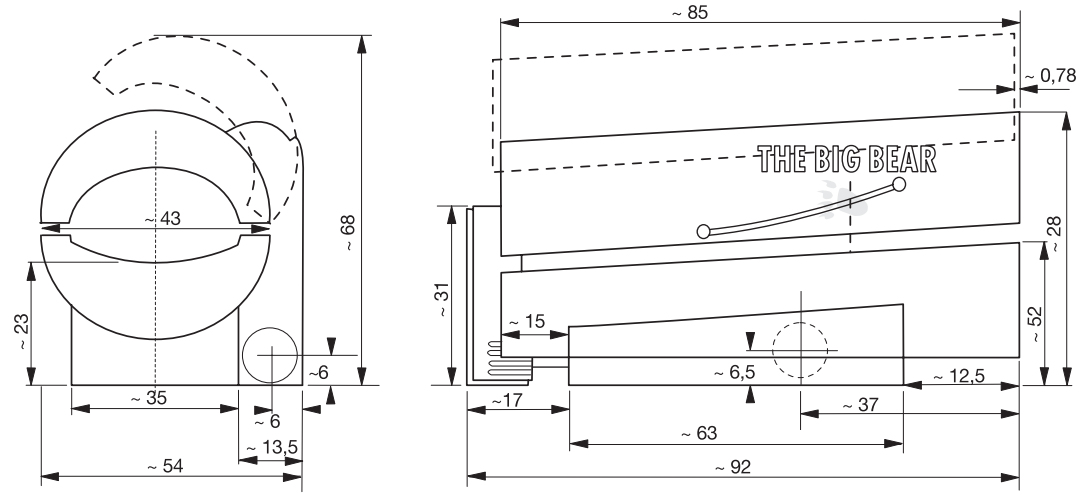

dimensions in inches

6

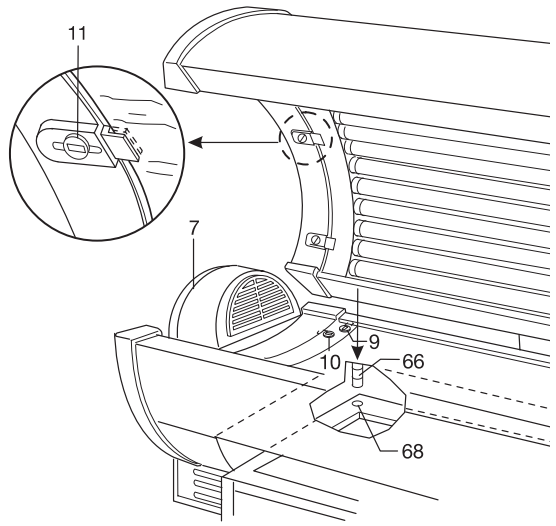

7

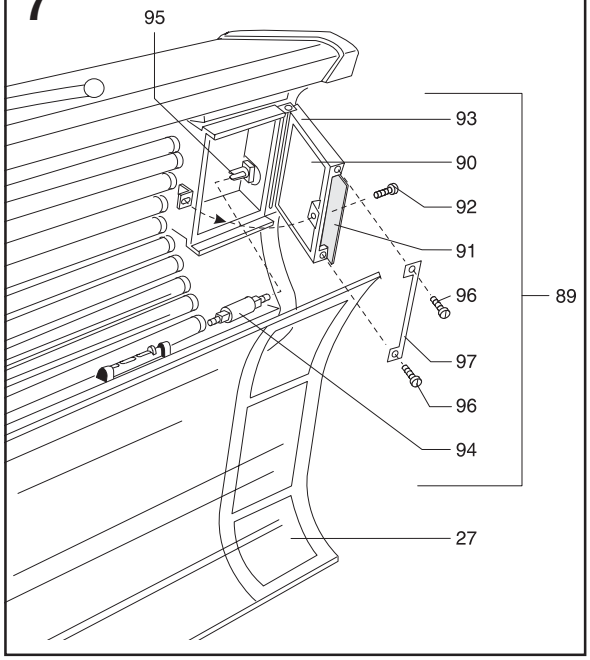

8

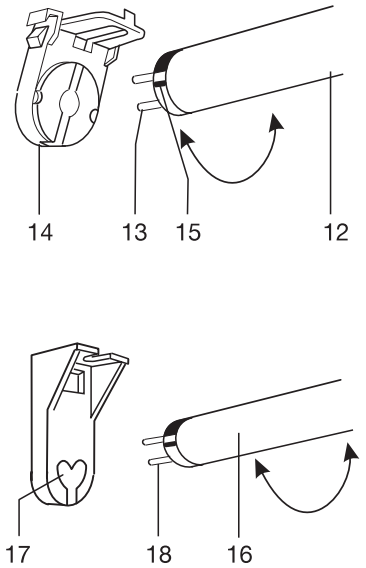

9

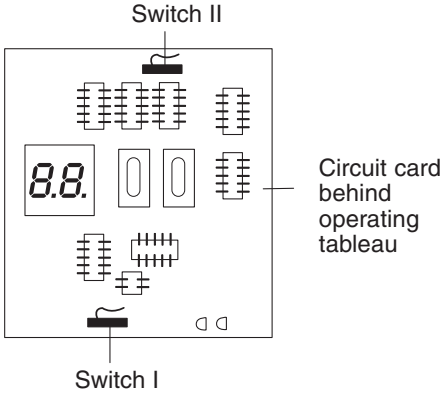

	Switch I	Switch II
Coin operation	Open	Closed
Private operation	Closed	Open