uwe GmbH
Buchstrasse 82 · Postfach 2020
D-73510 Schwäbisch Gmünd

drawing-no.	:	A7000/459
device type/		Typ 7019/148 HD
designation	:	Power of Chi
commission	:	USA
path	:	3
creation date	:	08. Okt. 2003
drawed by	:	NOS
modification date	:	25. Mai. 2004
modified by	:	NOS
feeding in	:	3/2~60Hz 220V 50/80A
number of pages	:	68

All rights reserved

technical modifications reserved

0	1	2	3	4	5	6	7	8	9

			date	18. Sep. 2002	Typ 7019/148 HD Power of Chi USA	cover page	drawing-no. A7000/459	UWEPLOR4
			drawed	NOS				
	25. Mai. 2004		checked	18. Okt. 2004			ident.-no.: 266596	page 1
modific.	date	name	norm		origin / repl. for	repl. by		68 pages

uwe GmbH
Buchstrasse 82 · Postfach 2020
D-73510 Schwäbisch Gmünd

index

WUPJ0010D 22.10.00

page	page designation	extra field	date	drawer	X
1	cover page		07. Jan. 2004	NOS	
2	index		07. Jan. 2004	NOS	x
2a	index		07. Jan. 2004	NOS	x
2b	index		07. Jan. 2004	NOS	x
3	modifications		07. Jan. 2004	MAD	
4	lamps, identification		07. Jan. 2004	NOS	
5	mounting plate no1; control		11. Dez. 2003	NOS	
5a	mounting plate no.1 control panel		04. Dez. 2003	NOS	
5b	mounting plate no. 2		28. Nov. 2003	NOS	
5c	mounting plate no. 3		28. Nov. 2003	NOS	
5d	mounting plate no. 4		29. Okt. 2003	NOS	
5e	mounting plate no. 5; base		31. Okt. 2003	NOS	
5f	canopy		20. Nov. 2003	NOS	
5g	bottom view base		17. Nov. 2003	NOS	
5h	pedestral housing		10. Dez. 2003	NOS	
5i	aroma module		31. Okt. 2003	NOS	
5j	thermostatic vent control		07. Jan. 2004	MAD	
6	main circuit		07. Jan. 2004	MAD	
6a	base lamps		07. Jan. 2004	MAD	
6b	canopy lamps		07. Jan. 2004	MAD	
6c	canopy lamps		07. Jan. 2004	NOS	
6d	HP lamps		27. Nov. 2003	NOS	
6e	light effects		07. Jan. 2004	NOS	
6f	fan circuit		07. Jan. 2004	NOS	
6g	PE		07. Jan. 2004	NOS	
6h	breeze		11. Dez. 2003	MAD	
6i	vent control		07. Jan. 2004	NOS	
6j	safety loop		07. Jan. 2004	NOS	
6k	chi machine		07. Jan. 2004	NOS	
6l	aroma module		07. Jan. 2004	NOS	

0	1	2	3	4	5	6	7	8	9

			date		Typ 7019/148 HD	index	drawing-no. A7000/459	UWEPLOR4
			drawed	NOS	Power of Chi			
	25. Mai. 2004		checked	18. Okt. 2004	USA		ident.-no.: 266596	page 2
modific.	date	name	norm		origin	repl. for / repl. by		68 pages

uwe GmbH
Buchstrasse 82 · Postfach 2020
D-73510 Schwäbisch Gmünd

index

page	page designation	extra field	date	drawer	X
6m	control circuit		07. Jan. 2004	MAD	
6n	control circuit		07. Jan. 2004	NOS	
6p	audio		07. Jan. 2004	NOS	
7	X1		15. Dez. 2003	NOS	
8	X2		15. Dez. 2003	NOS	
9	X3		15. Dez. 2003	NOS	
10	X4		15. Dez. 2003	NOS	
11	X5		15. Dez. 2003	NOS	
12	X6		15. Dez. 2003	NOS	
13	X7		15. Dez. 2003	NOS	
14	X8		15. Dez. 2003	NOS	
15	X9		15. Dez. 2003	NOS	
16	X10		15. Dez. 2003	NOS	
17	X12		15. Dez. 2003	NOS	
18	MP3+MP4		15. Dez. 2003	NOS	
19	X14		15. Dez. 2003	NOS	
20	X15		15. Dez. 2003	NOS	
21	X16		15. Dez. 2003	NOS	
22	X17		15. Dez. 2003	NOS	
23	X18		15. Dez. 2003	NOS	
24	X19		15. Dez. 2003	NOS	
25	X20		15. Dez. 2003	NOS	
26	X21		15. Dez. 2003	NOS	
27	X50		15. Dez. 2003	NOS	
28	X51		15. Dez. 2003	NOS	
29	X52		15. Dez. 2003	NOS	
30	X52		15. Dez. 2003	NOS	
31	X53		15. Dez. 2003	NOS	
32	X54		15. Dez. 2003	NOS	
33	X55		15. Dez. 2003	NOS	

index

page	page designation	extra field	date	drawer	X
34	X56		15. Dez. 2003	NOS	
35	X57		15. Dez. 2003	NOS	
36	X57		15. Dez. 2003	NOS	
37	X58		15. Dez. 2003	NOS	
38	X59		15. Dez. 2003	NOS	
39	X55a		15. Dez. 2003	NOS	
40	A4-X60		15. Dez. 2003	NOS	

0		1		2	3	4	5	6	7	8	9
			date		Typ 7019/148 HD	index	uwe GmbH	drawing-no. A7000/459		UWEPLOR4
			drawed	NOS	Power of Chi		Buchstrasse 82 · Postfach 2020			
	25. Mai. 2004		checked	18. Okt. 2004	USA		D-73510 Schwäbisch Gmünd	ident.-no.: 266596		page 2b
modific.	date	name	norm		origin	repl. for	repl. by			68 pages

statistic of modifications

mod. no.	mod. date from	drawer	modification	shortname	page

0	1	2	3	4	5	6	7	8	9

			date		Typ 7019/148 HD		modifications	drawing-no. A7000/459	UWEPLOR4
			drawed	MAD	Power of Chi				
	25. Mai. 2004		checked	18. Okt. 2004	USA			ident.-no.: 266596	page 3
modific.	date	name	norm		origin	repl. for	repl. by		68 pages

uwe GmbH
Buchstrasse 82 · Postfach 2020
D-73510 Schwäbisch Gmünd

lamps and identification

terminals:

connectors: X0 ... X29
terminal blocks: X50 ... X99
ext. components and subassembly: X100 ... X199

component identification

ballasts: L
ignition components: Z
lamps: E
control components: A
fans/motors: M
circuit-breaker: Q
control switch: S
timer: P

LP base lamps: E1-E20
HP and LP lamps canopy: E21-99

floorlight: E100

background light ilumination: E101-E120

color code

color	code
white	WH
red	RD
blue	BU
green	GN
yellow	YE
grey	GY
brown	BN
orange	OG
black	BK
turquoise	TQ
ivory	IV
beige	BE
oliv	OL
violett	VI
green yellow	GNYE

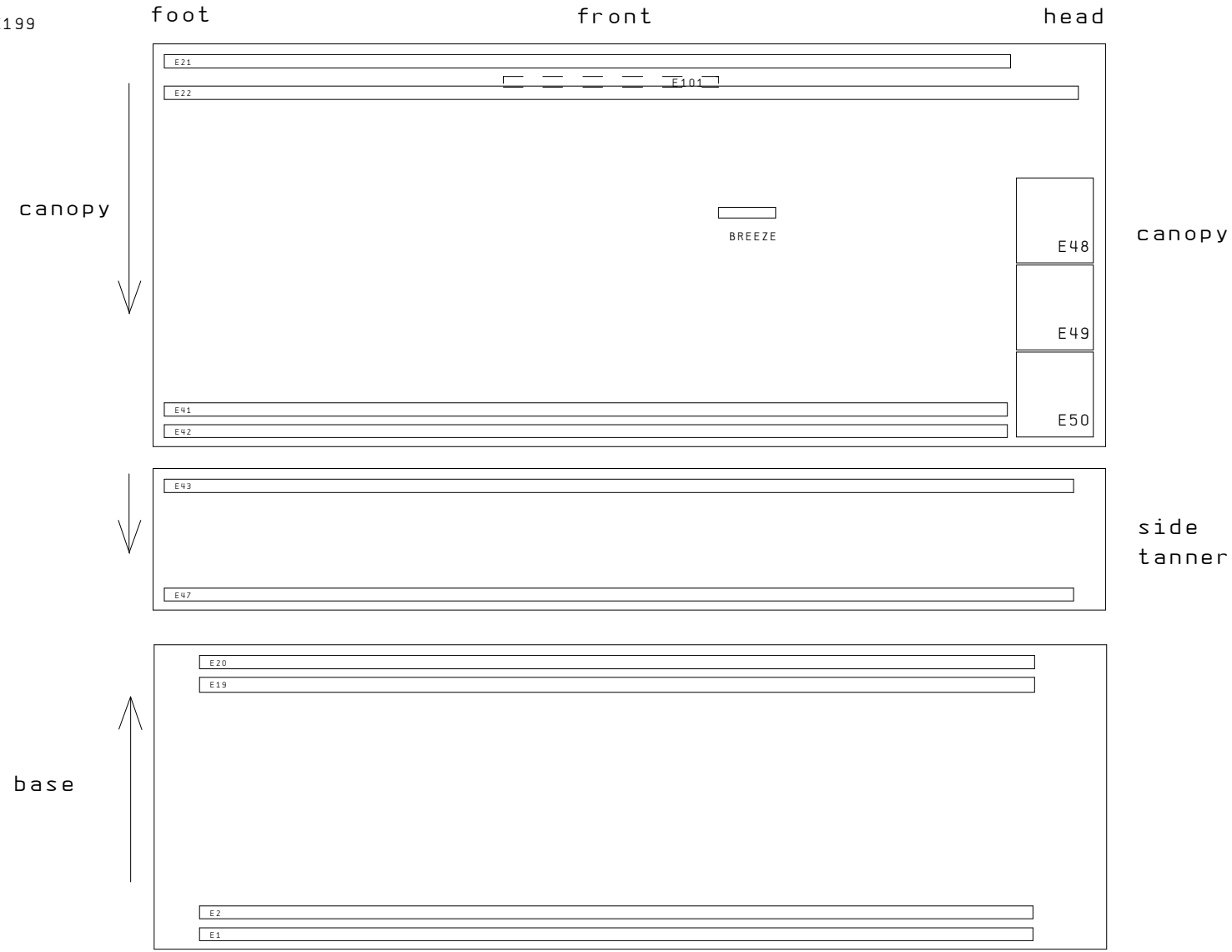

3 5

0	1	2	3	4	5	6	7	8	9

			date		Typ 7019/148 HD	lamps,	drawing-no. A7000/459	UWEPLOR4
			drawed	NOS	Power of Chi	identification		
	25. Mai. 2004		checked	18. Okt. 2004	USA		ident.-no.: 266596	page 4
modific.	date	name	norm		origin	repl. for	repl. by	68 pages

uwe GmbH
Buchstrasse 82 · Postfach 2020
D-73510 Schwäbisch Gmünd

mounting plate no. 1; control panel

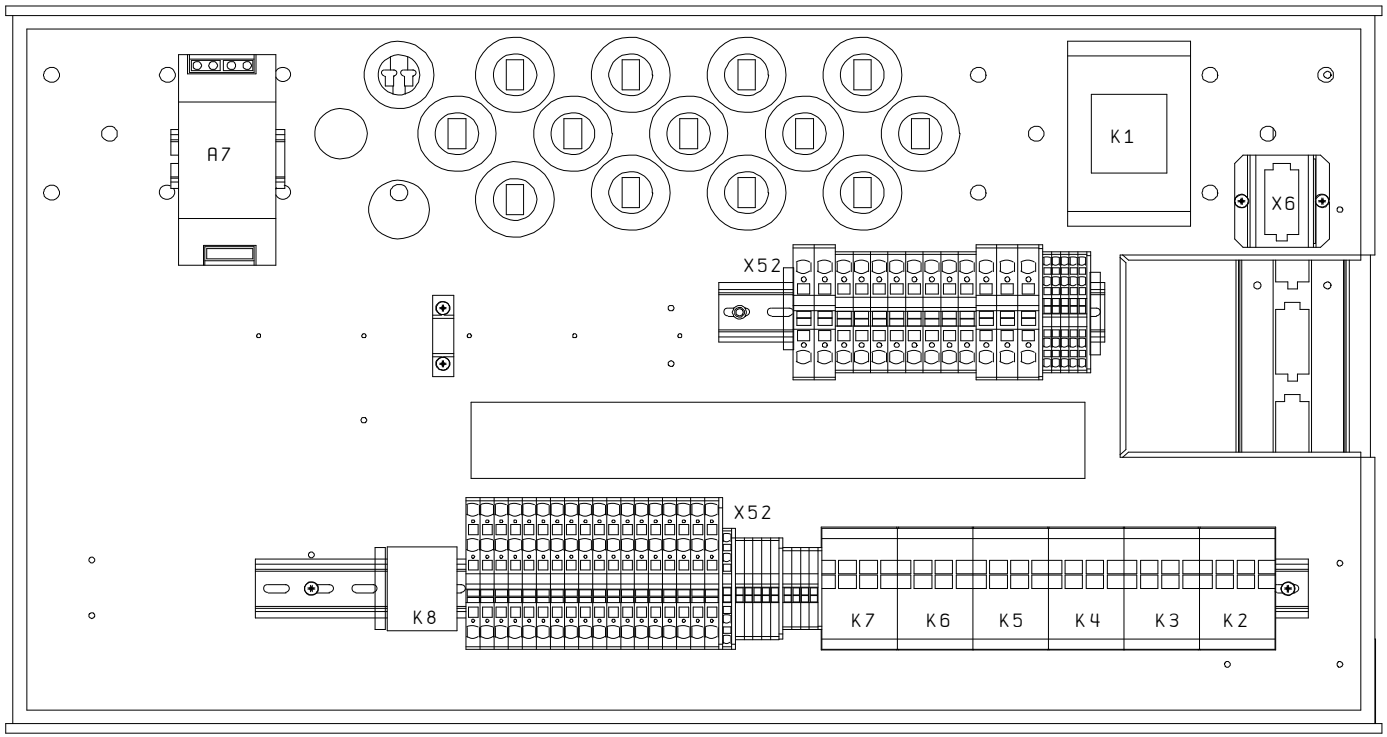

4

5a

0			1		2	3	4	5	6	7	8	9
			Datum		Typ 7019/148 HD Power of Chi USA		mounting plate no1; control	uwe GmbH Buchstrasse 82 · Postfach 2020 D-73510 Schwäbisch Gmünd		Z. -Nr.: A7000/459		UWEPL02
			Bearb.	NOS								
	25. Mai. 2004		Gepr.	18. Okt. 2004						Mat. -Nr.: 266596		Bl. 5
Änderung	Datum	Name	Norm		Urspr.	Ers. f.	Ers. d.					68 Bl.

mounting plate no. 1; control panel (back)

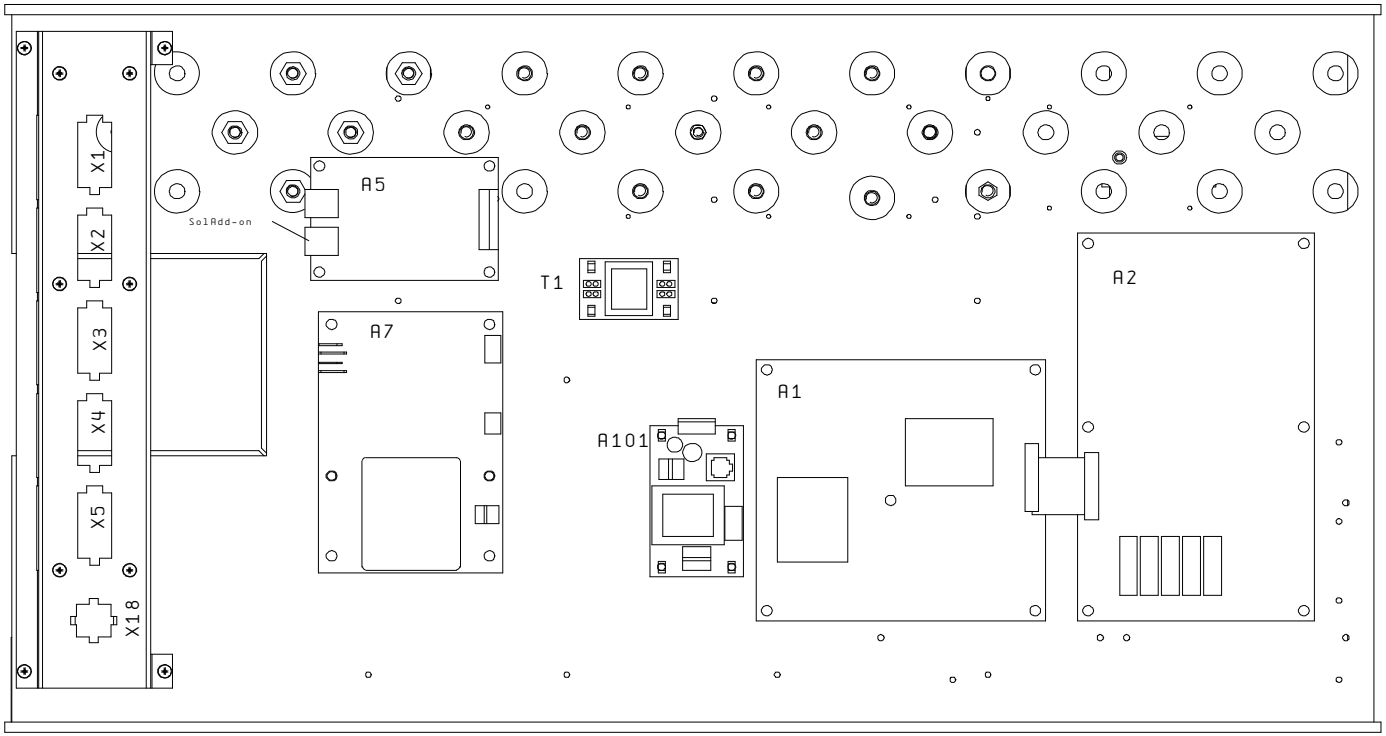

5

5b

0			1		2	3	4	5	6	7	8	9
			Datum		Typ 7019/148 HD		mounting plate no. 1	uwe GmbH		Z.-Nr.: A7000/459		UWEPL02
			Bearb.	NOS	Power of Chi		control panel	Buchstrasse 82 · Postfach 2020				
	25. Mai. 2004		Gepr.	18. Okt. 2004	USA			D-73510 Schwäbisch Gmünd		Mat.-Nr.:		Bl. 5a
Änderung	Datum	Name	Norm		Urspr.	Ers. f.	Ers. d.			266596		68 Bl.

mountig plate no. 2

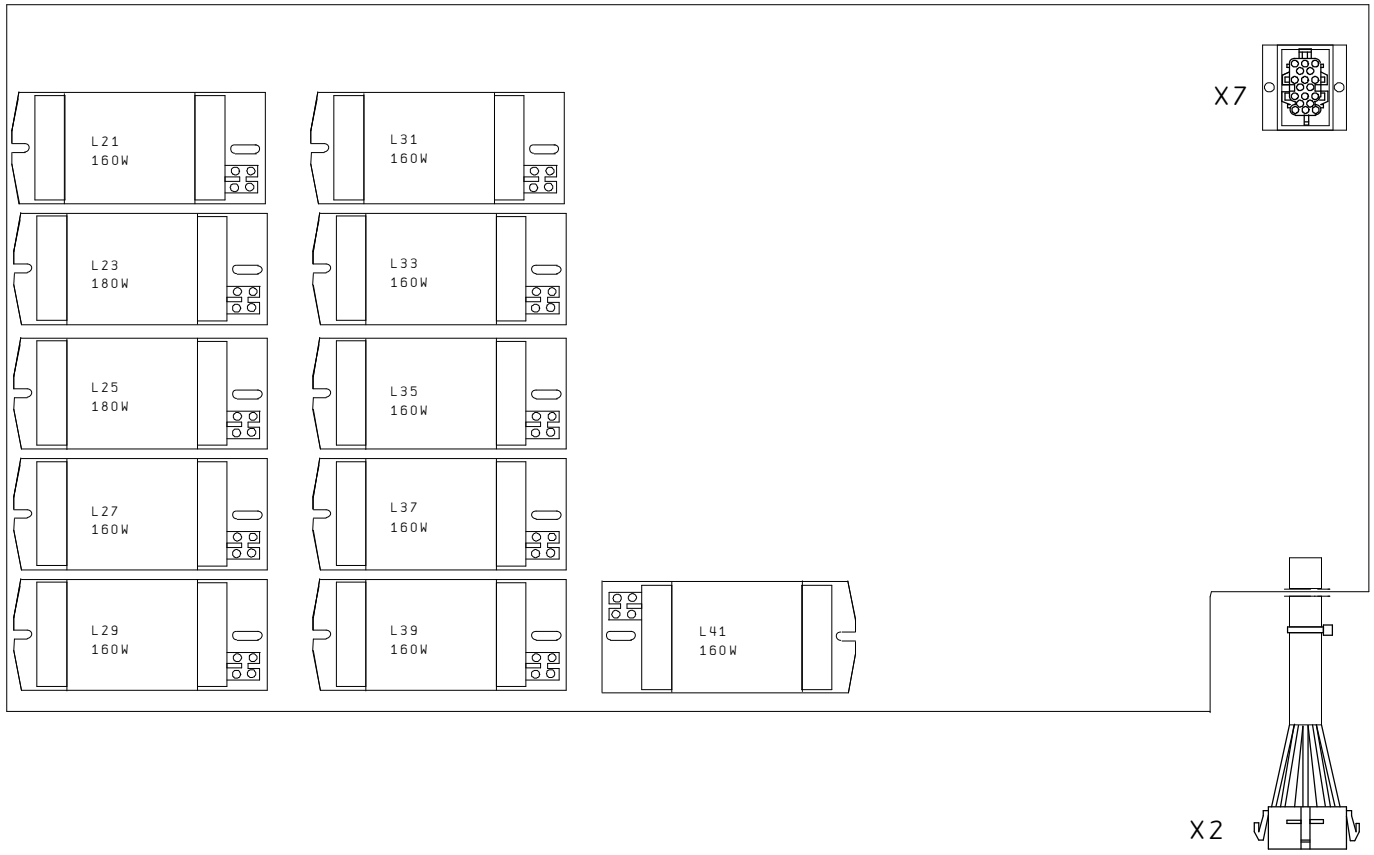

5a

5c

0	1	2	3	4	5	6	7	8	9

			Datum		Typ 7019/148 HD Power of Chi USA		mounting plate no. 2	uwe GmbH Buchstrasse 82 · Postfach 2020 D-73510 Schwäbisch Gmünd	Z. -Nr.: A7000/459	UWEPL02
			Bearb.	NOS						
	25. Mai. 2004		Gepr.	18. Okt. 2004					Mat. -Nr.: 266596	Bl. 5b
Änderung	Datum	Name	Norm		Urspr.	Ers. f.	Ers. d.			68 Bl.

mountig plate no. 3

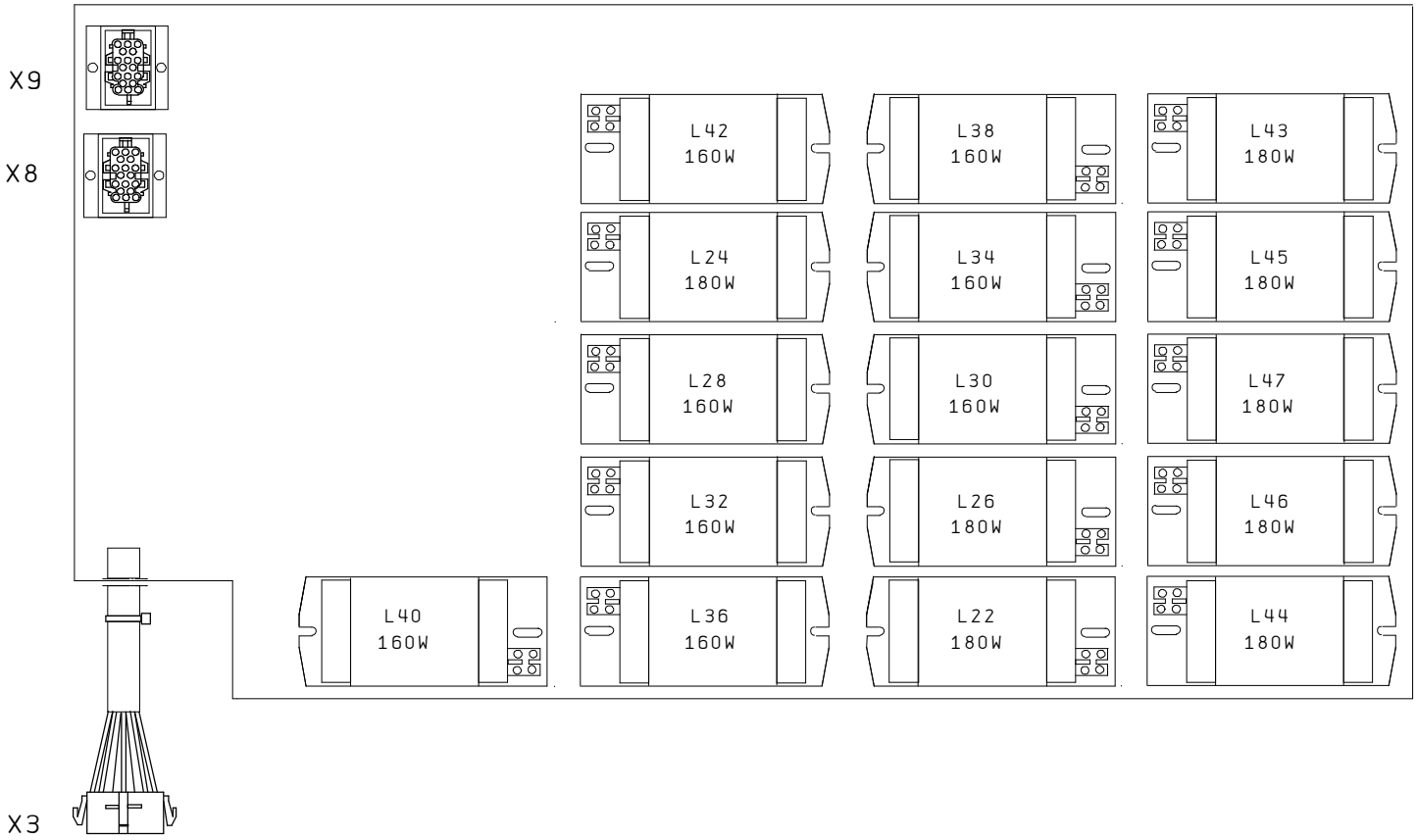

5b

5d

0			1		2	3	4	5	6	7	8	9
			Datum		Typ 7019/148 HD Power of Chi USA		mounting plate no. 3	uwe GmbH Buchstrasse 82 · Postfach 2020 D-73510 Schwäbisch Gmünd		Z.-Nr.: A7000/459		UWEPL02
			Bearb.	NOS								
	25. Mai. 2004		Gepr.	18. Okt. 2004						Mat.-Nr.: 266596		Bl. 5c
Änderung	Datum	Name	Norm		Urspr.	Ers. f.	Ers. d.					68 Bl.

mounting plate no. 4

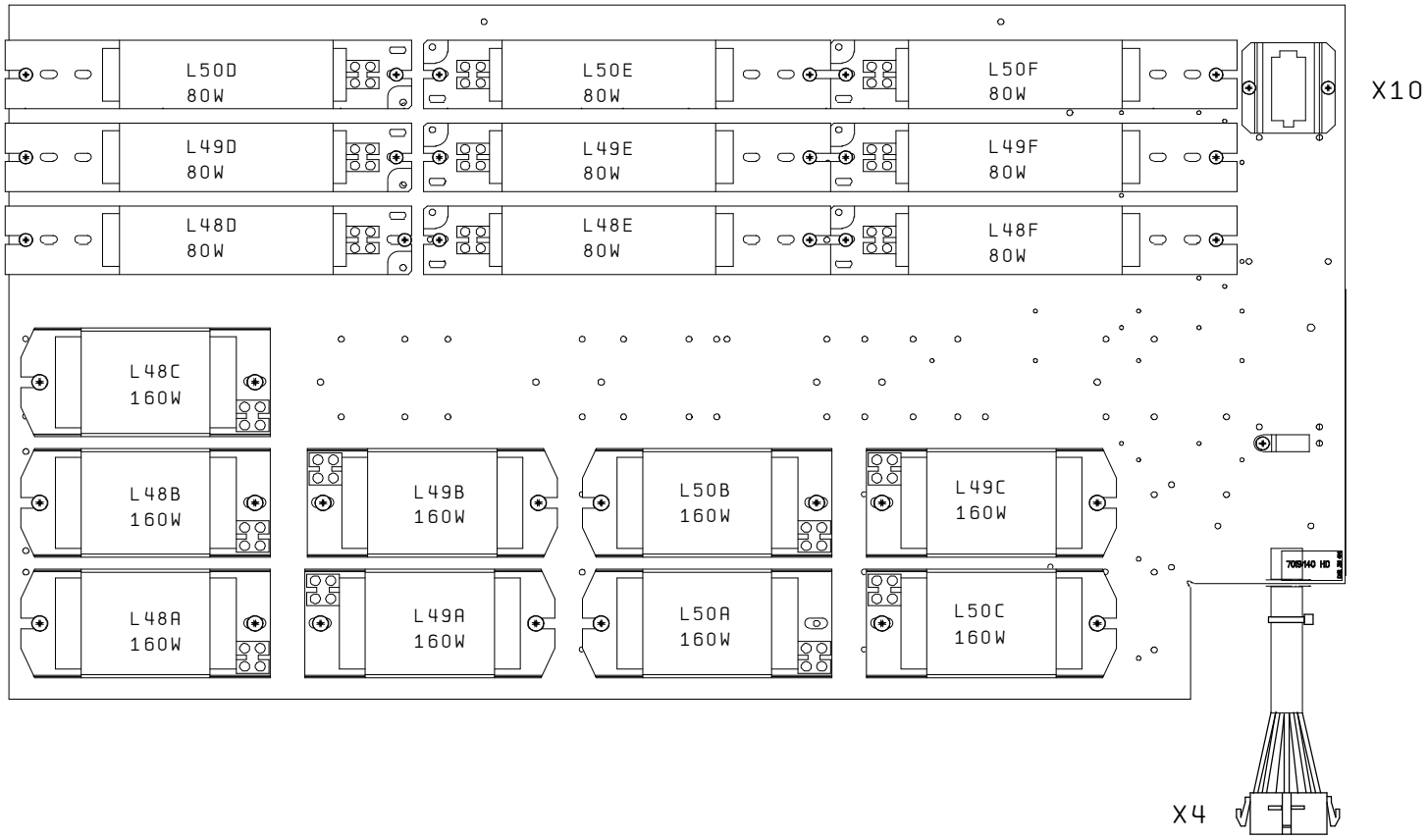

5c

5e

0		1			2	3	4	5	6	7	8	9
			Datum		Typ 7019/148 HD Power of Chi USA		mounting plate no. 4	uwe GmbH Buchstrasse 82 · Postfach 2020 D-73510 Schwäbisch Gmünd		Z.-Nr.: A7000/459		UWEPL02
			Bearb.	NOS								
	25. Mai. 2004		Gepr.	18. Okt. 2004						Mat.-Nr.: 266596		Bl. 5d
Änderung	Datum	Name	Norm		Urspr.	Ers. f.	Ers. d.					68 Bl.

mounting plate no. 5

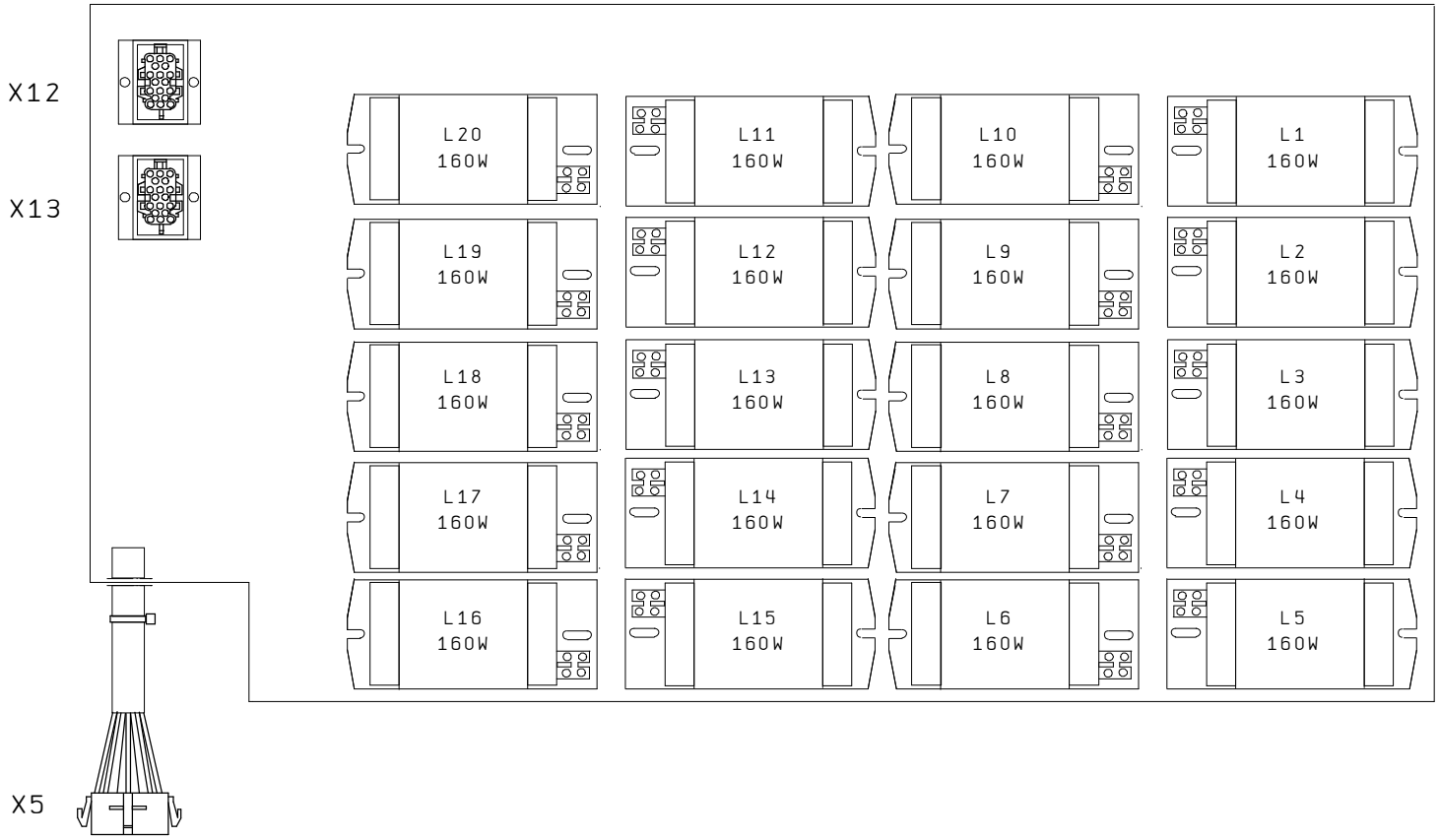

5d

5f

0	1	2	3	4	5	6	7	8	9

			Datum		Typ 7019/148 HD		mounting plate		
			Bearb.	NOS	Power of Chi		no. 5; base		
	25. Mai. 2004		Gepr.	18. Okt. 2004	USA				
Änderung	Datum	Name	Norm		Urspr.	Ers. f.	Ers. d.		

uwe GmbH
Buchstrasse 82 · Postfach 2020
D-73510 Schwäbisch Gmünd

Z. -Nr.: A7000/459

UWEPL02

Mat. -Nr.: 266596

Bl. 5e

68 Bl.

canopy

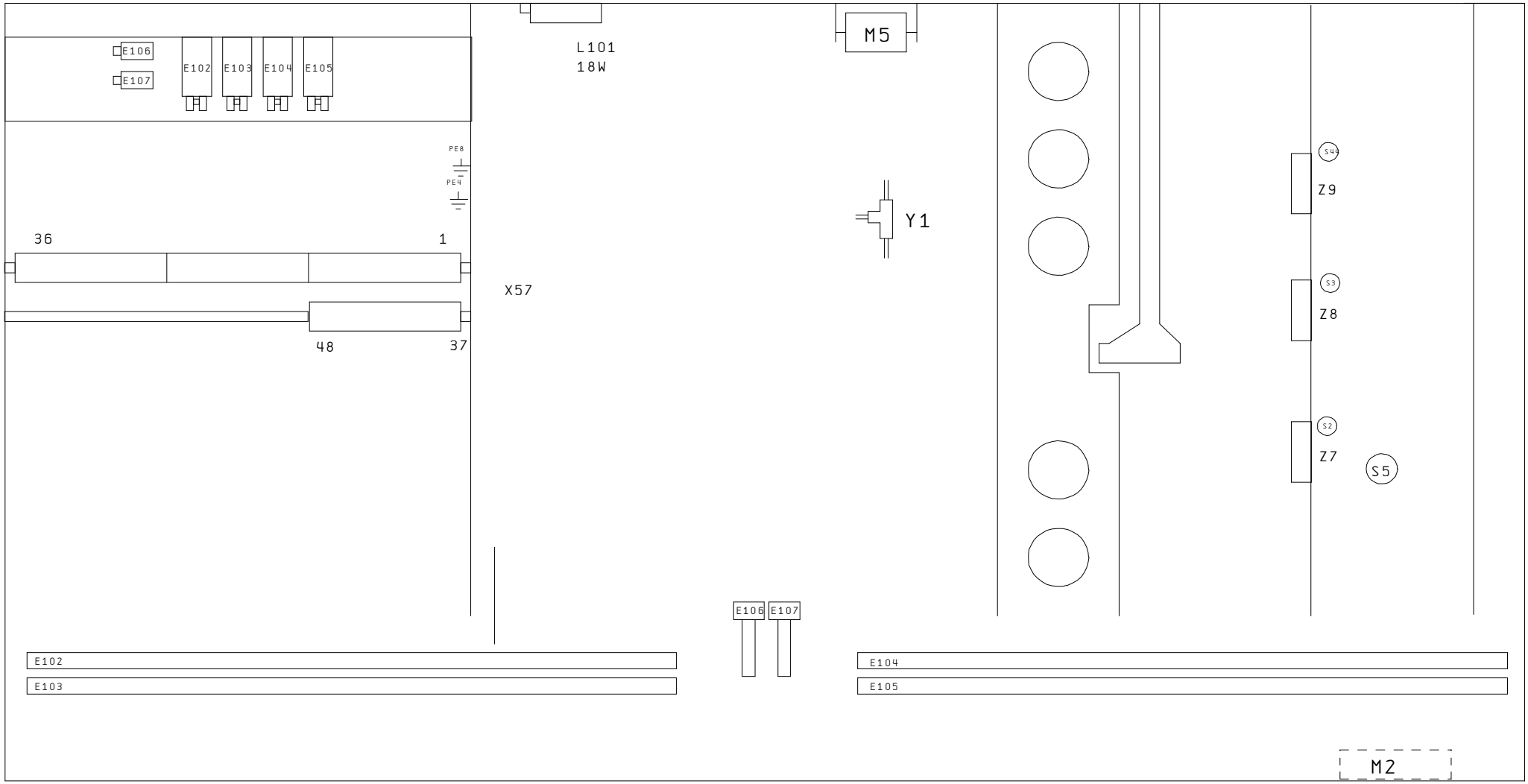

5e 5g

0	1	2	3	4	5	6	7	8	9

			Datum		Typ 7019/148 HD		canopy		
			Bearb.	NOS	Power of Chi				
	25. Mai. 2004		Gepr.	18. Okt. 2004	USA				
Änderung	Datum	Name	Norm		Urspr.	Ers. f.	Ers. d.		

uwe GmbH
Buchstrasse 82 · Postfach 2020
D-73510 Schwäbisch Gmünd

Z. -Nr.: A7000/459

UWEPL02

Mat. -Nr.: 266596

Bl. 5f

68 Bl.

top view base

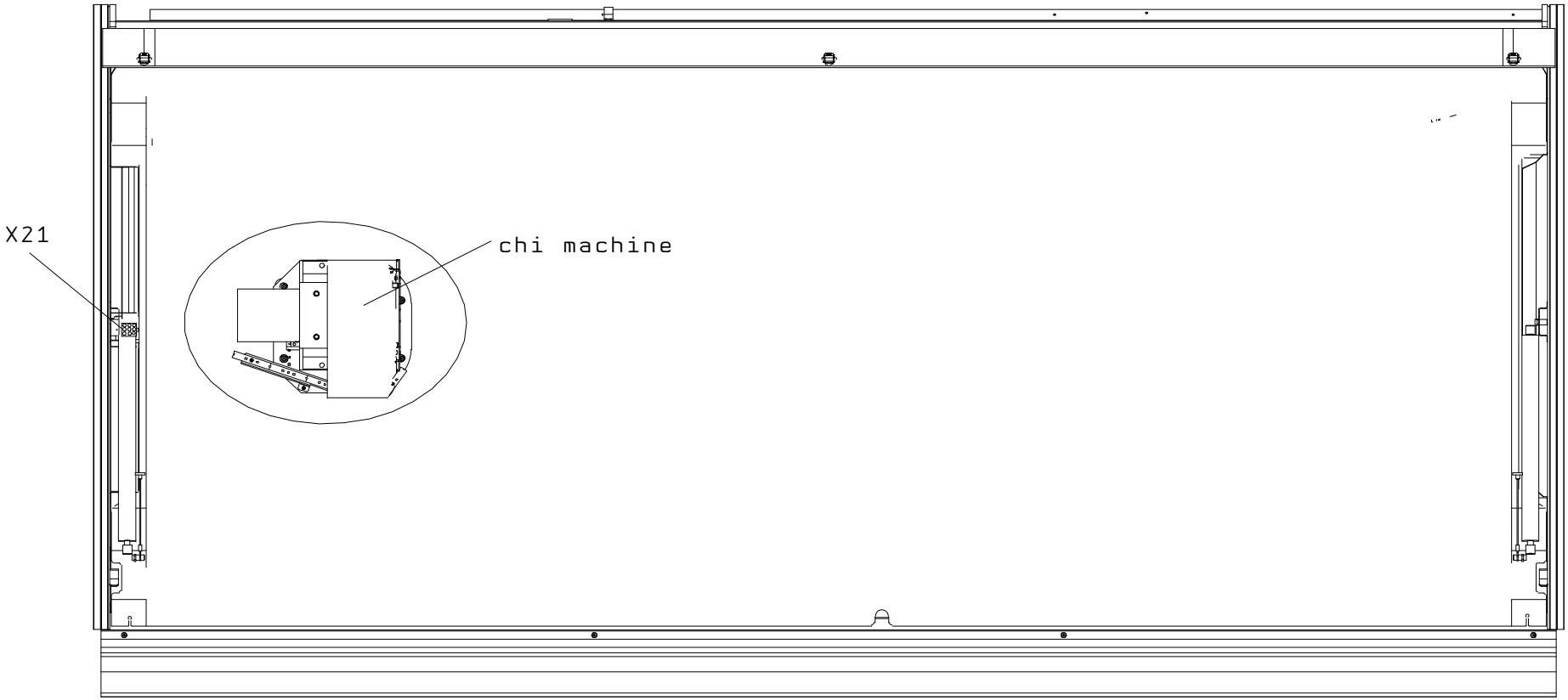

5f

5h

0			1		2	3	4	5	6	7	8	9
			date		Typ 7019/148 HD		top view base	uwe GmbH Buchstrasse 82 · Postfach 2020 D-73510 Schwäbisch Gmünd		drawing-no. A7000/459		UWEPLOR4
			drawed	NOS	Power of Chi							
	25. Mai. 2004		checked	18. Okt. 2004	USA					ident.-no.: 266596		page 5g
modific.	date	name	norm		origin	repl. for	repl. by					68 pages

bottom view base

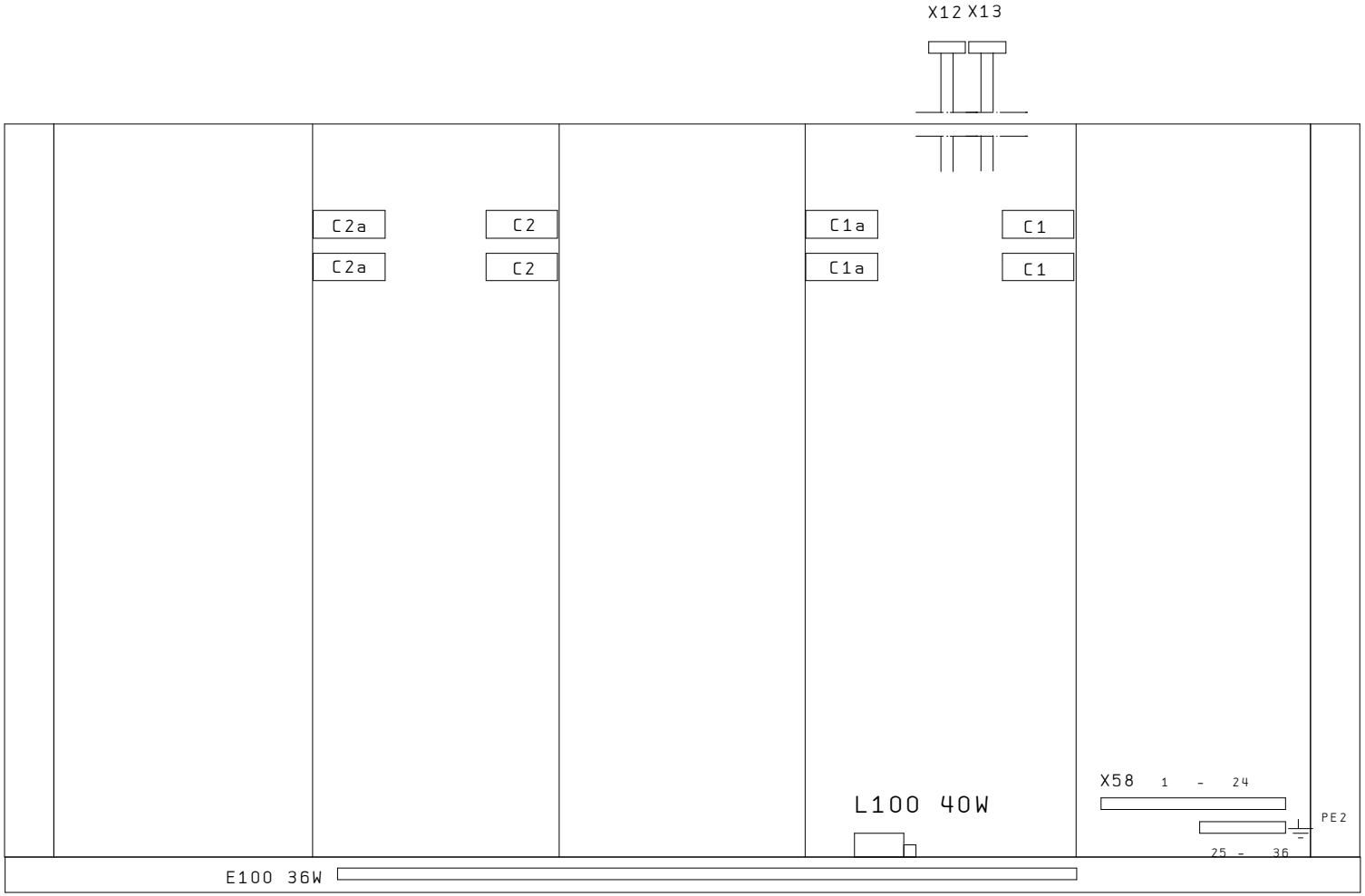

5g

5i

0	1	2	3	4	5	6	7	8	9

			date		Typ 7019/148 HD		bottom view base	uwe GmbH	drawing-no. A7000/459		UWEPLOR4
			drawed	NOS	Power of Chi			Buchstrasse 82 · Postfach 2020			
	25. Mai. 2004		checked	18. Okt. 2004	USA			D-73510 Schwäbisch Gmünd	ident.-no.: 266596		page 5h
modific.	date	name	norm		origin	repl. for	repl. by				68 pages

pedestral housing

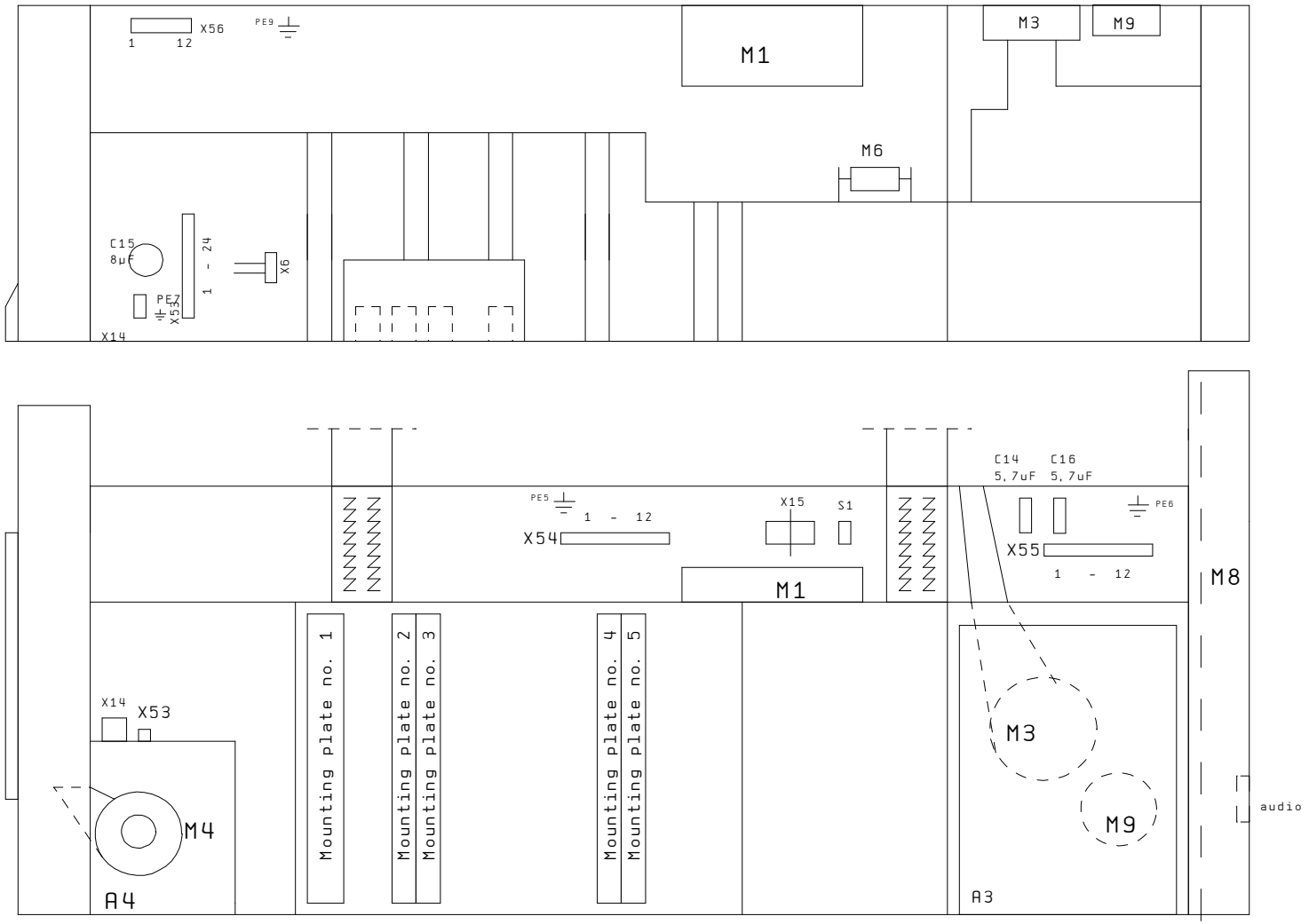

5h

5j

0	1	2	3	4	5	6	7	8	9

			Datum		Typ 7019/148 HD		pedestral housing	uwe GmbH	Z. -Nr.: A7000/459	UWEPLOZ
			Bearb.	NOS	Power of Chi			Buchstrasse 82 · Postfach 2020		
	25. Mai. 2004		Gepr.	18. Okt. 2004	USA			D-73510 Schwäbisch Gmünd	Mat. -Nr.: 266596	Bl. 5i
Änderung	Datum	Name	Norm		Urspr.	Ers. f.	Ers. d.			68 Bl.

aroma module

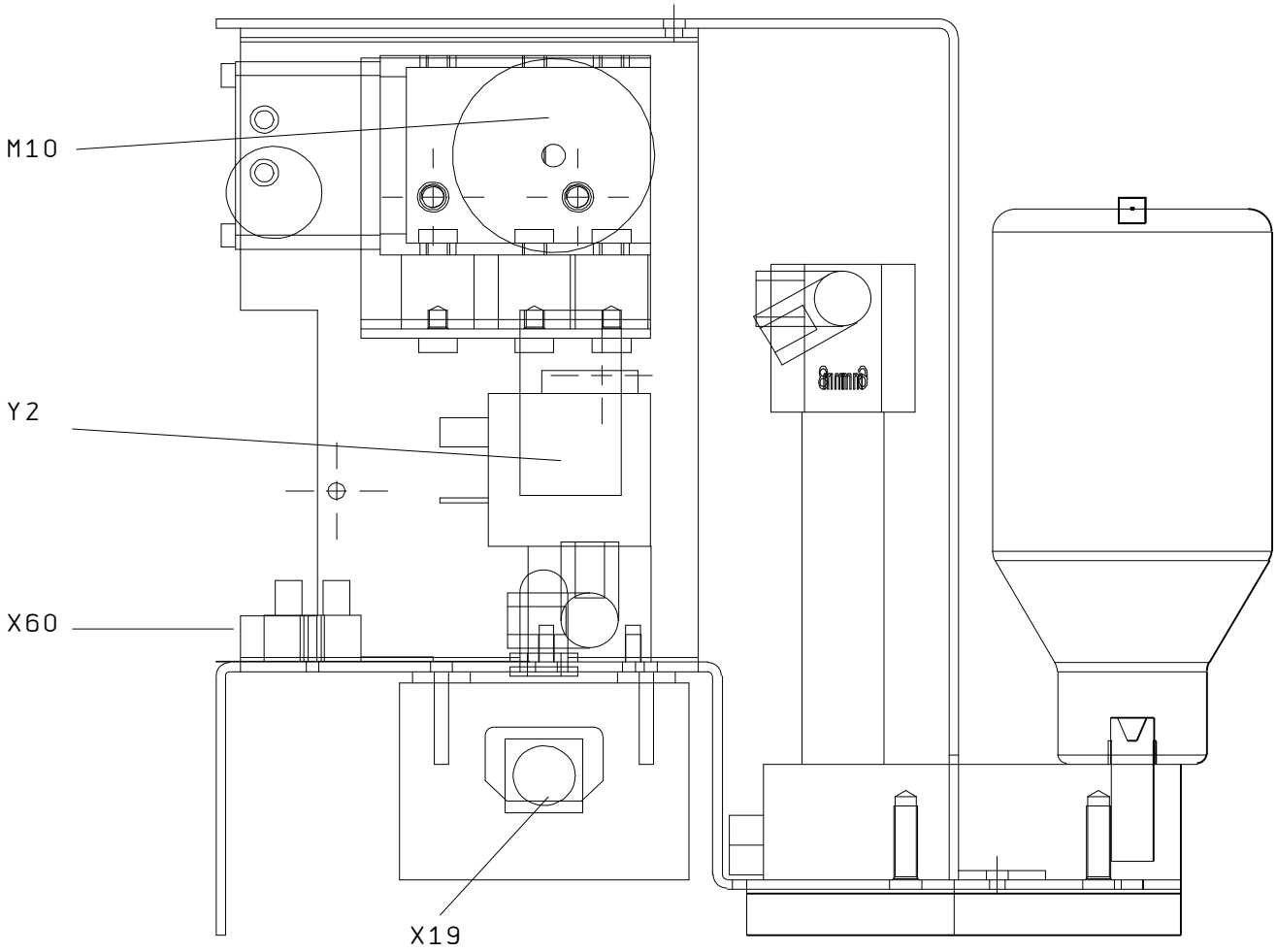

5i

5k

0	1				2	3	4	5	6	7	8	9
			date		Typ 7019/148 HD		aroma module	uwe GmbH		drawing-no. A7000/459		UWEPLOR4
			drawed	NOS	Power of Chi			Buchstrasse 82 · Postfach 2020				
	25. Mai. 2004		checked	18. Okt. 2004	USA			D-73510 Schwäbisch Gmünd		ident.-no.: 266596		page 5j
modific.	date	name	norm		origin	repl. for	repl. by					68 pages

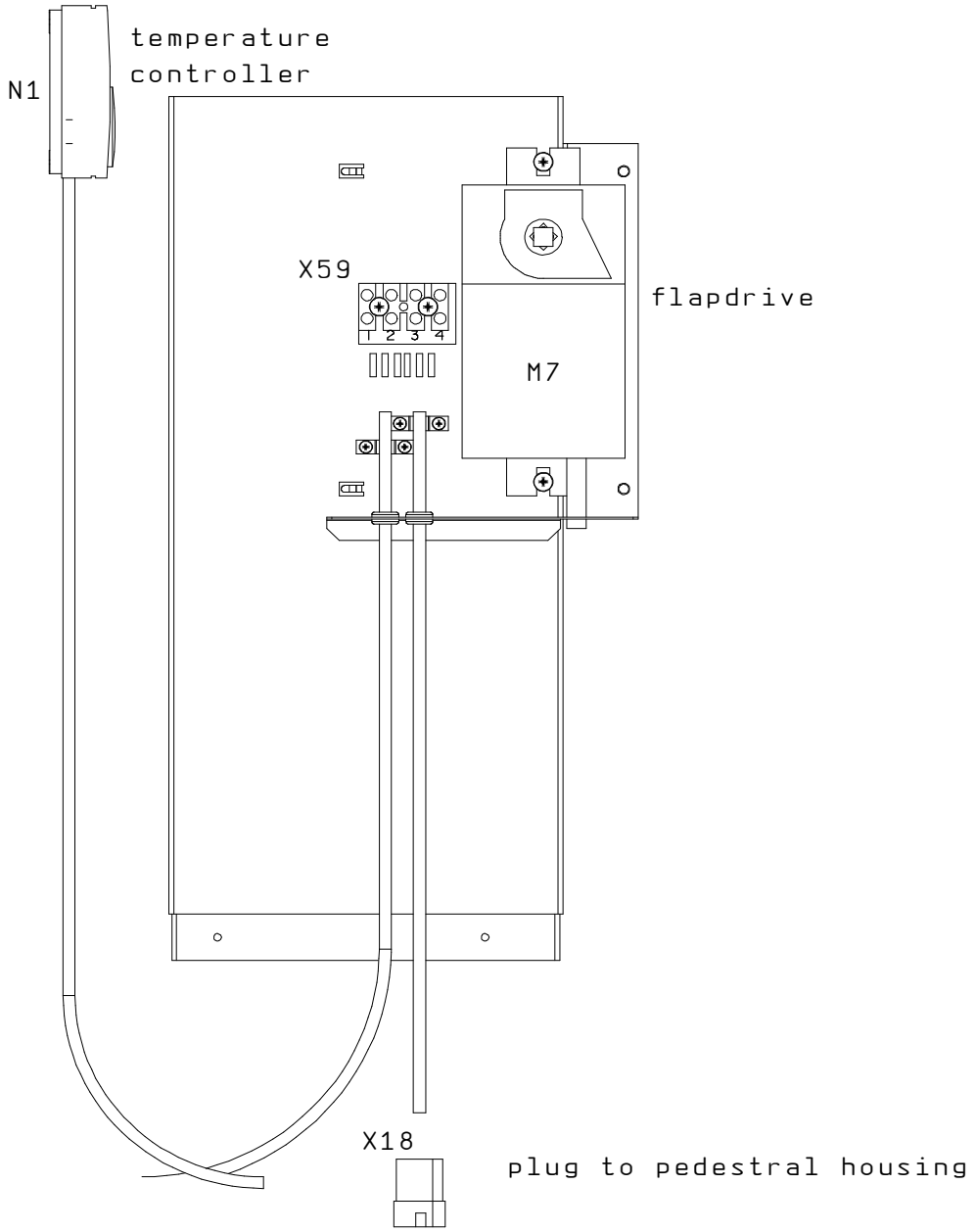

thermostatic vent control

5j

6

0	1	2	3	4	5	6	7	8	9

			date		Typ 7019/148 HD		thermostatic		
			drawed	MAD	Power of Chi		vent control		
	25. Mai. 2004		checked	18. Okt. 2004	USA				
modific.	date	name	norm		origin	repl. for	repl. by		

uwe GmbH
Buchstrasse 82 · Postfach 2020
D-73510 Schwäbisch Gmünd

drawing-no. A7000/459

UWEPLOR4

ident.-no.: 266596

page 5k

68 pages

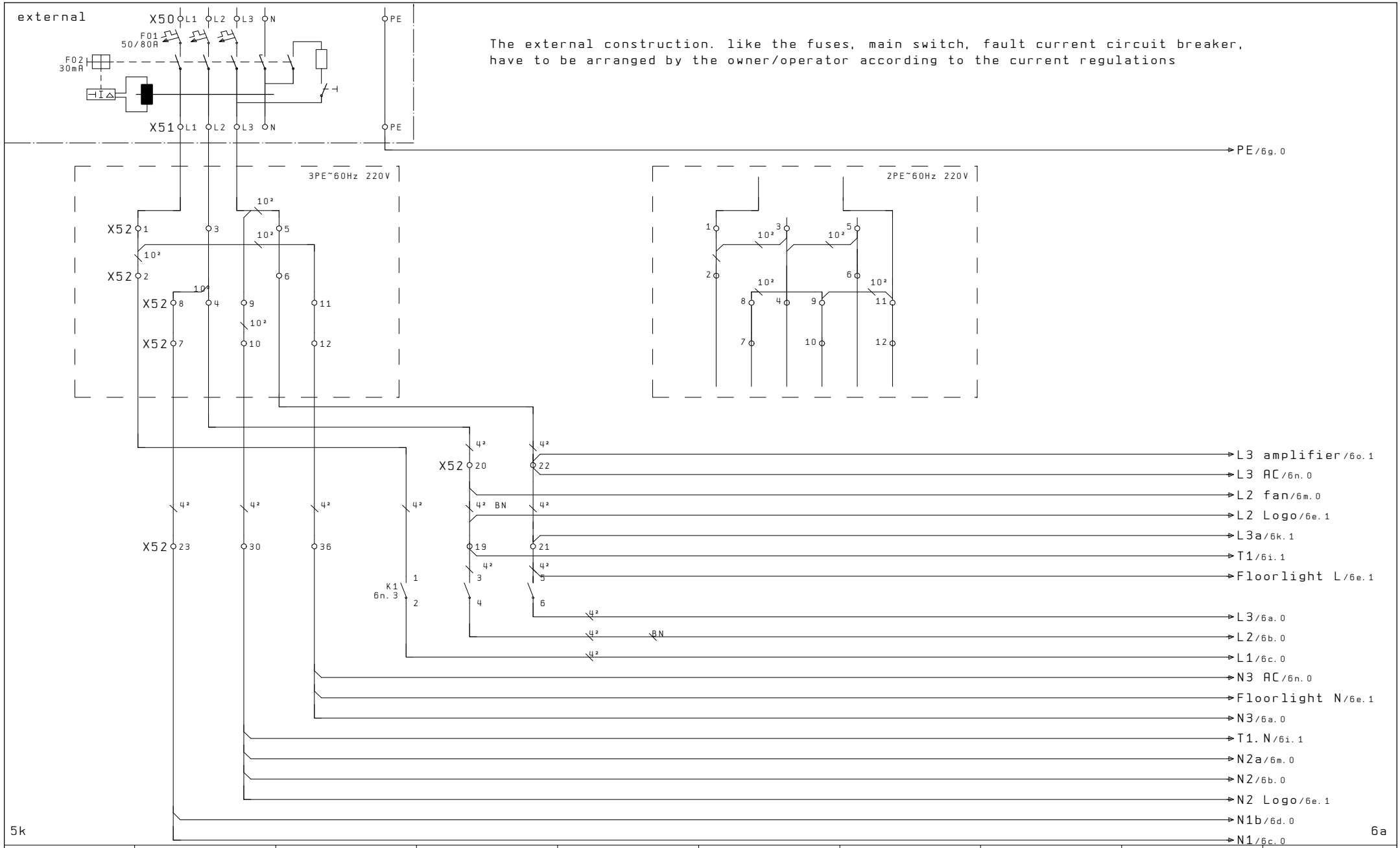

0	1	2	3	4	5	6	7	8	9

			date		Typ 7019/148 HD	main circuit	drawing-no. A7000/459	UWEPLOR4
			drawed	MAD	Power of Chi			
	25. Mai. 2004		checked	18. Okt. 2004	USA		ident.-no.: 266596	page 6
modific.	date	name	norm		origin	repl. for / repl. by		68 pages

uwe GmbH
Buchstrasse 82 · Postfach 2020
D-73510 Schwäbisch Gmünd

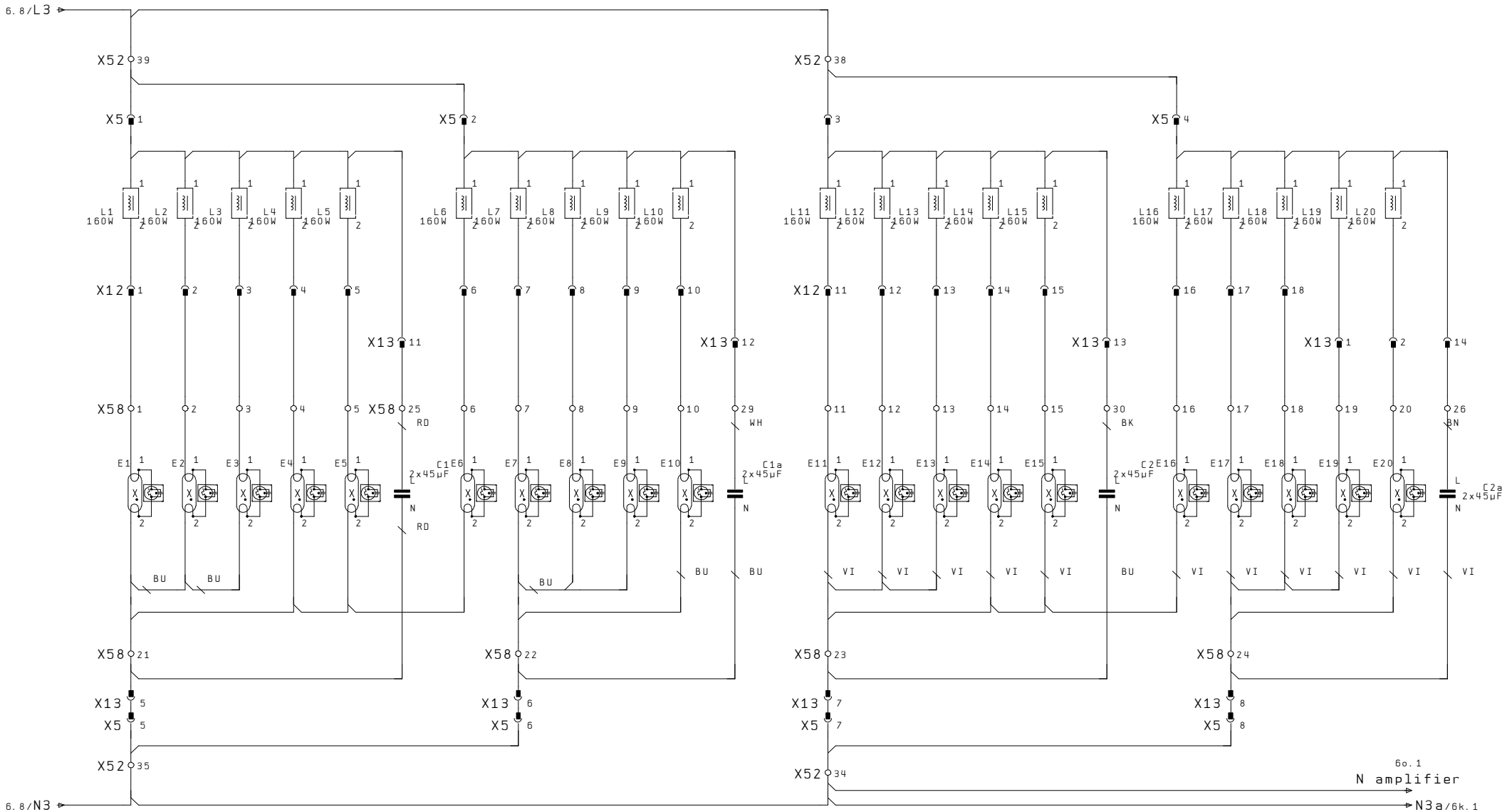

6

6b

0	1				2	3	4	5	6	7	8	9
			date		Typ 7019/148 HD		base lamps	uwe GmbH Buchstrasse 82 · Postfach 2020 D-73510 Schwäbisch Gmünd	drawing-no. A7000/459		UWEPLOR4	
			drawed	MAD	Power of Chi							
	25. Mai. 2004		checked	18. Okt. 2004	USA				ident.-no.: 266596		page 6a	
modific.	date	name	norm		origin	repl. for	repl. by				68 pages	

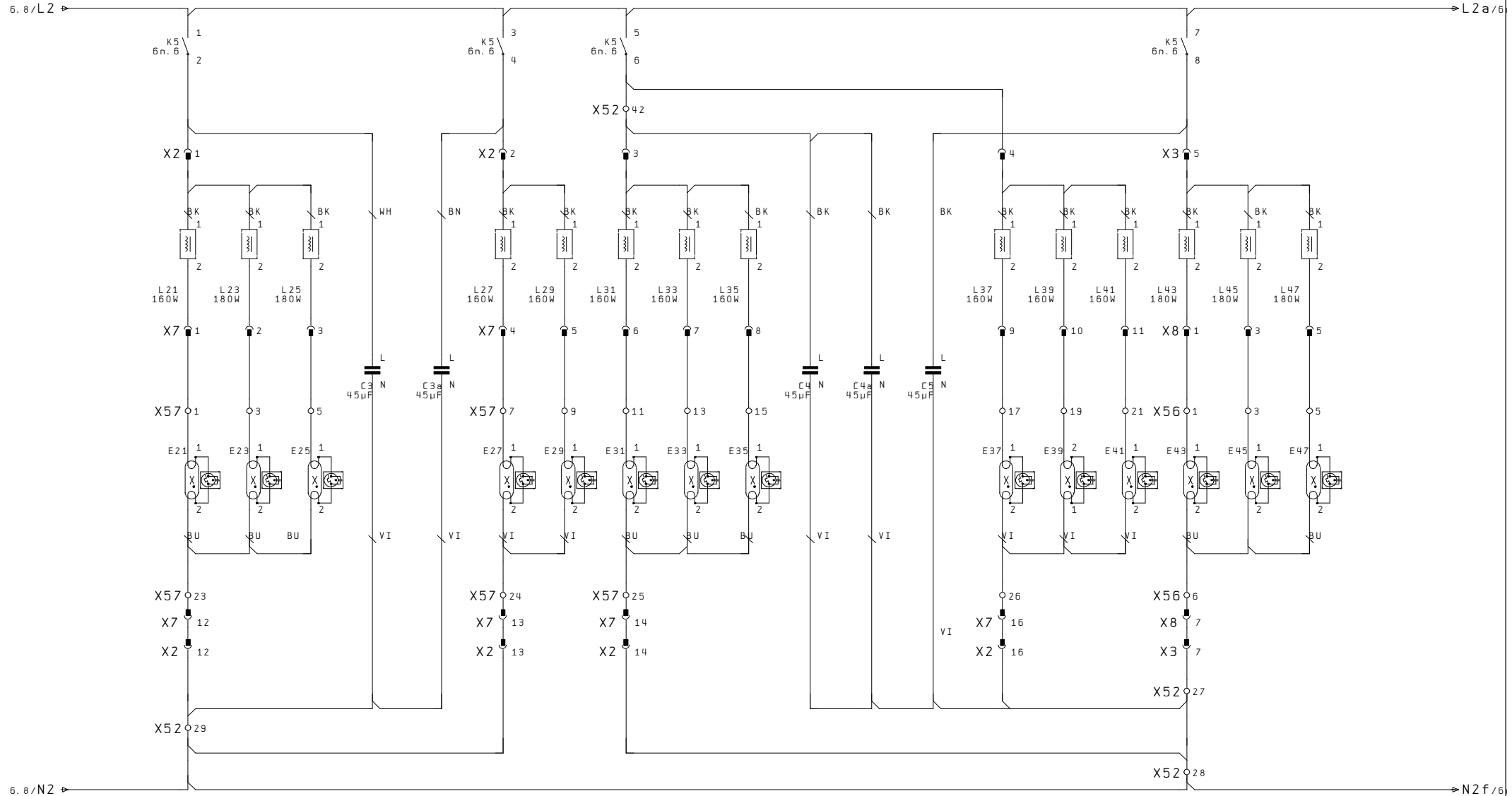

0	1	2	3	4	5	6	7	8	9

			date		Typ 7019/148 HD	canopy lamps	drawing-no. A7000/459	UWEPLOR4
			drawed	MAD	Power of Chi			
	25. Mai. 2004		checked	18. Okt. 2004	USA		ident.-no.: 266596	page 6b
modific.	date	name	norm		origin	repl. for / repl. by		68 pages

uwe GmbH
Buchstrasse 82 · Postfach 2020
D-73510 Schwäbisch Gmünd

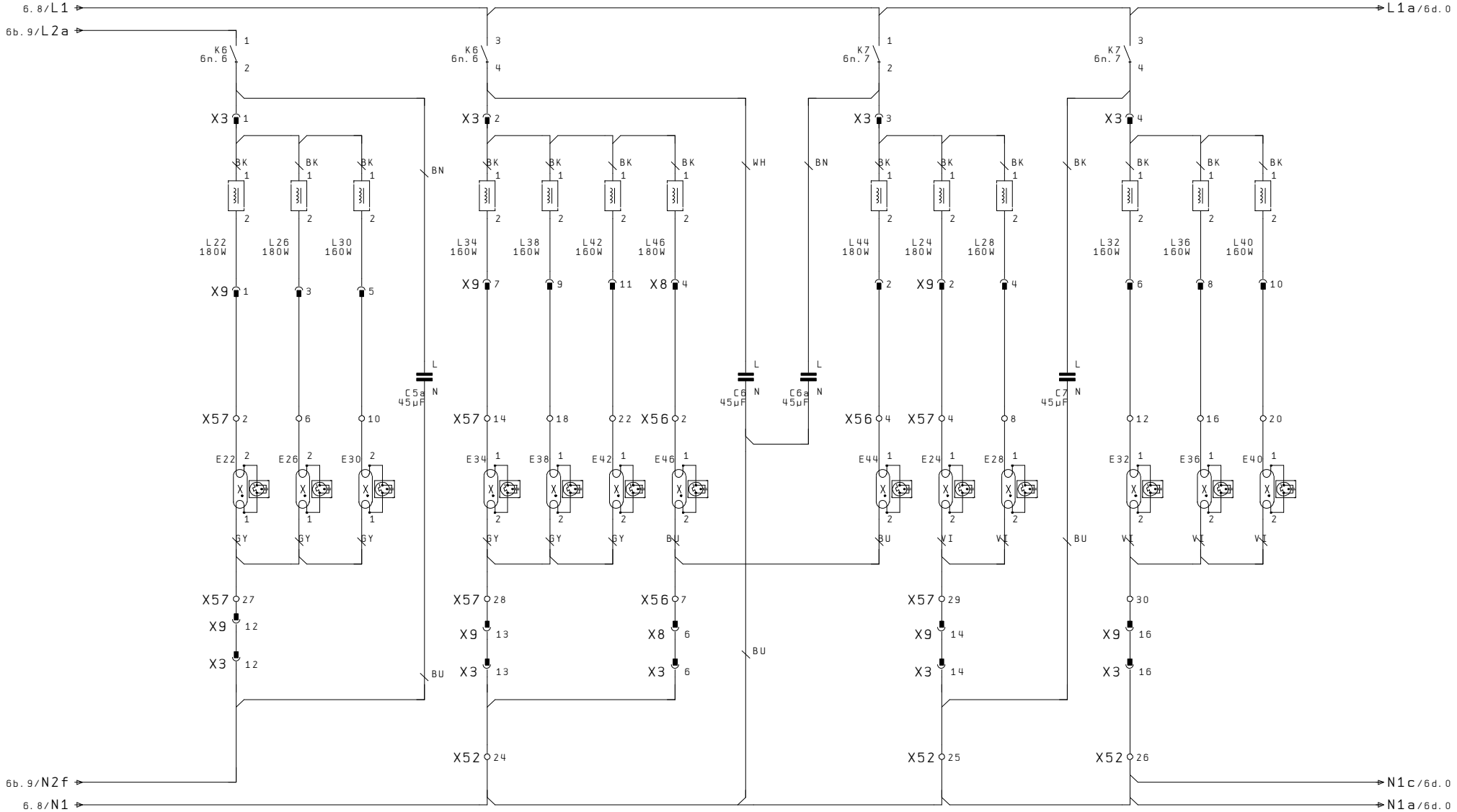

6b

6d

0	1	2	3	4	5	6	7	8	9

			date		Typ 7019/148 HD	canopy lamps	drawing-no. A7000/459	UWEPLOR4
			drawed	NOS	Power of Chi			
	25. Mai. 2004		checked	18. Okt. 2004	USA		ident.-no.: 266596	page 6c
modific.	date	name	norm		origin	repl. for / repl. by		68 pages

uwe GmbH
Buchstrasse 82 · Postfach 2020
D-73510 Schwäbisch Gmünd

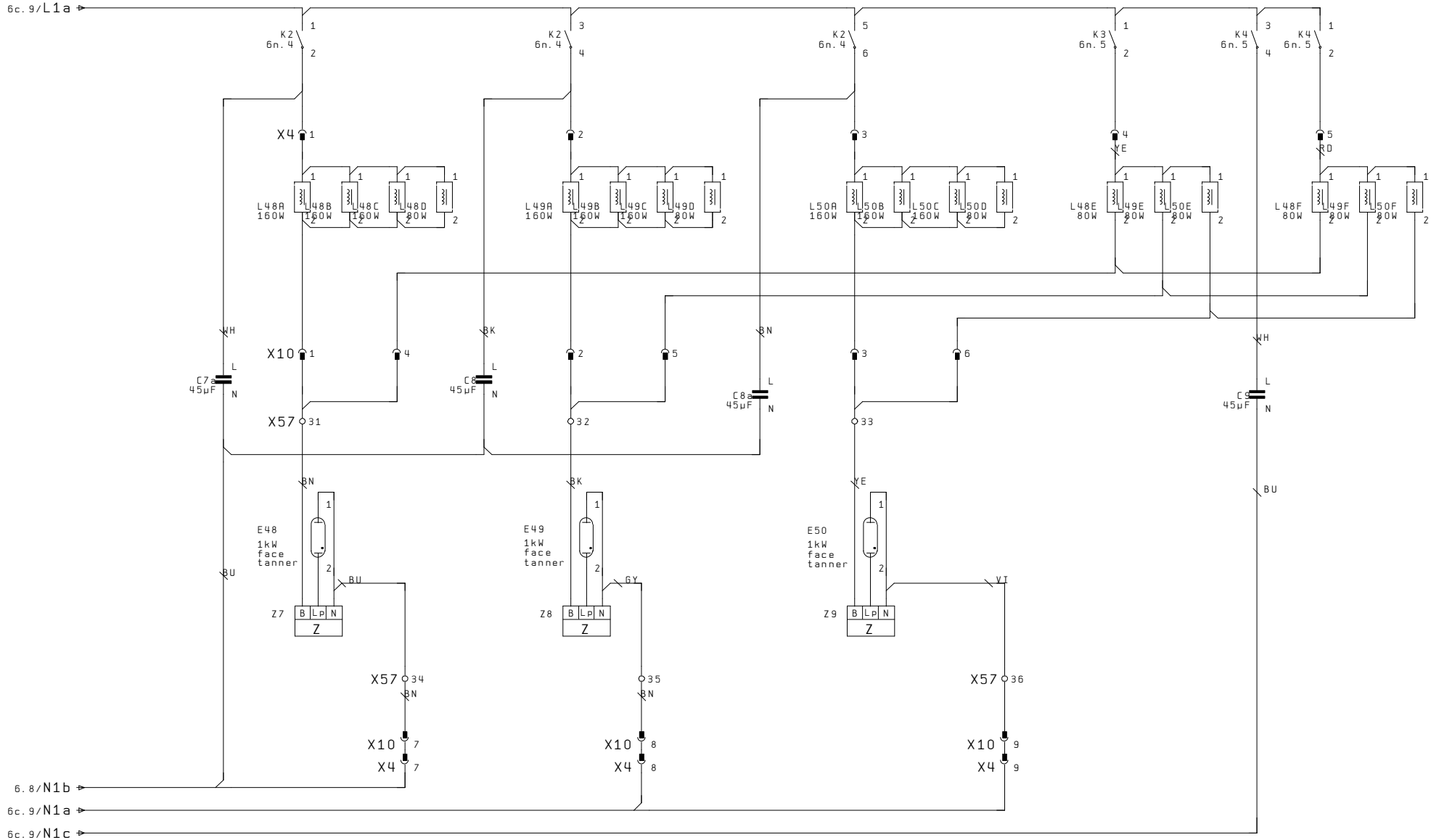

0	1	2	3	4	5	6	7	8	9

			Datum		Typ 7019/148 HD		HP lamps	Z. -Nr.: A7000/459	UWEPL02
			Bearb.	NOS	Power of Chi				
	25. Mai. 2004		Gepr.	18. Okt. 2004	USA			Mat. -Nr.: 266596	Bl. 6d
Änderung	Datum	Name	Norm		Urspr.	Ers. f.	Ers. d.		68 Bl.

uwe GmbH
Buchstrasse 82 · Postfach 2020
D-73510 Schwäbisch Gmünd

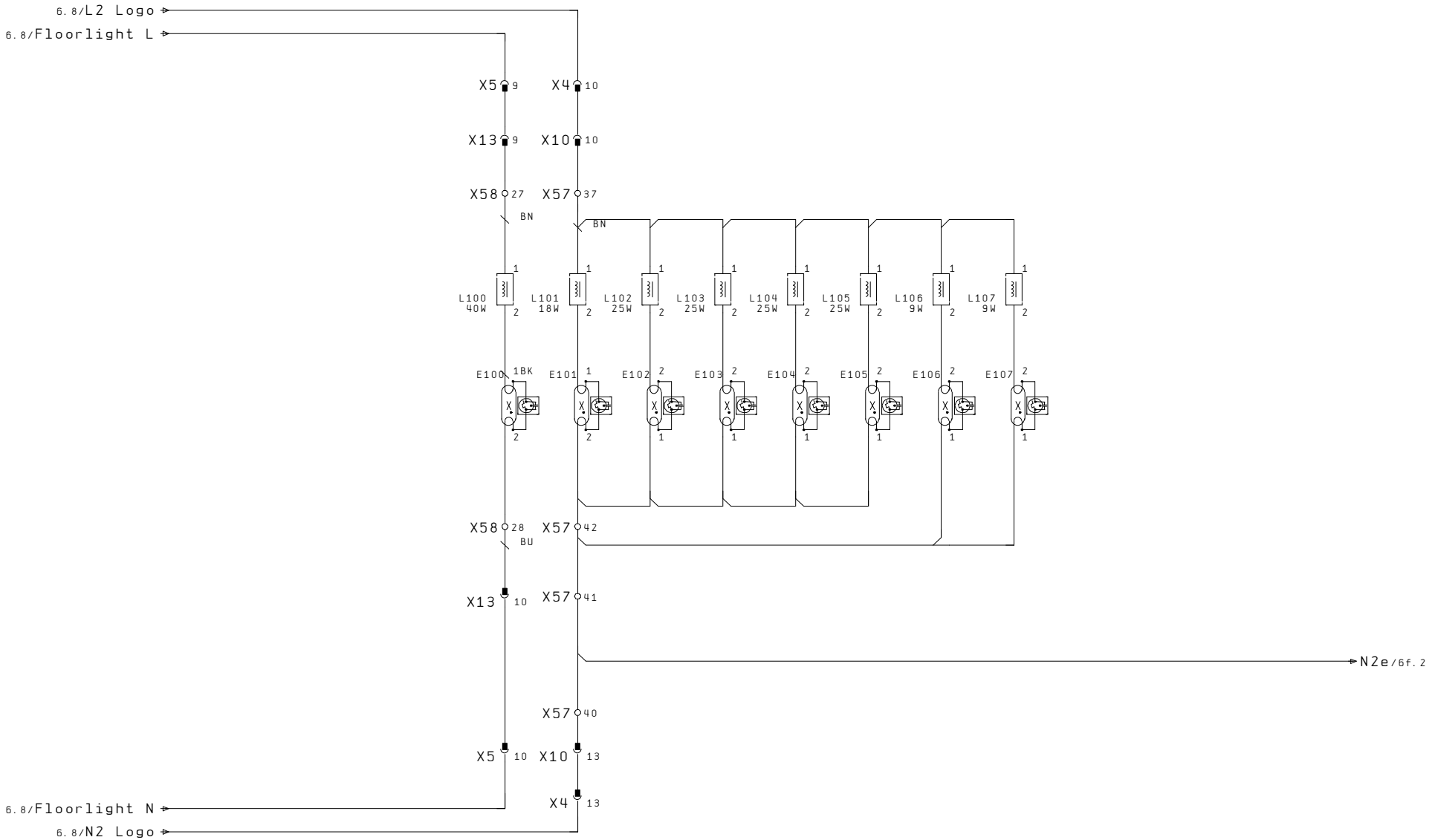

6d

6f

0	1	2	3	4	5	6	7	8	9

			date		Typ 7019/148 HD		light effects	uwe GmbH	drawing-no. A7000/459	UWEPLOR4
			drawed	NOS	Power of Chi			Buchstrasse 82 · Postfach 2020		
	25. Mai. 2004		checked	18. Okt. 2004	USA			D-73510 Schwäbisch Gmünd	ident.-no.: 266596	page 6e
modific.	date	name	norm		origin	repl. for	repl. by			68 pages

The external construction. like the fuses, main switch, fault current circuit breaker,
have to be arranged by the owner/operator according to the current regulations

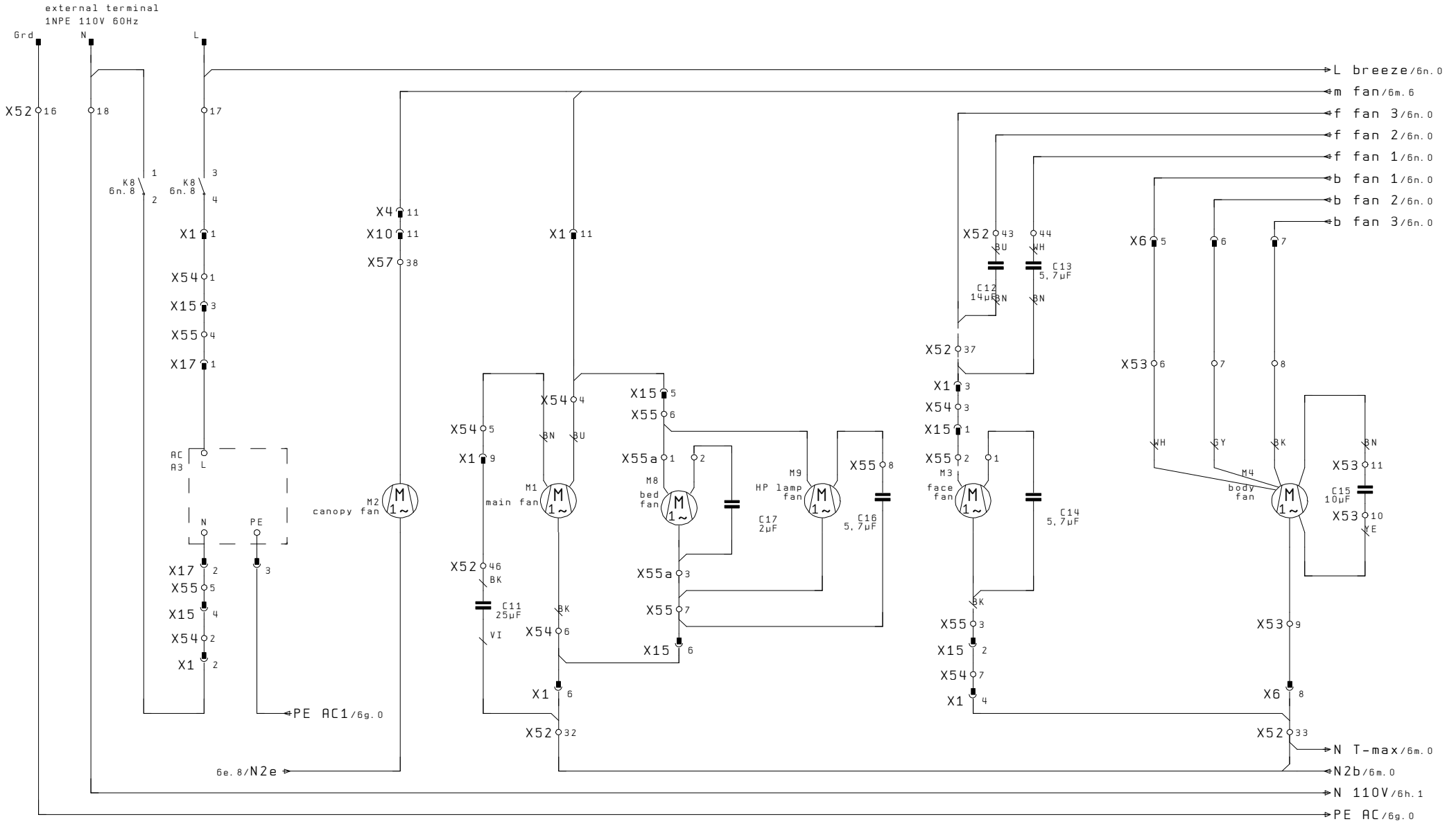

0	1				2	3	4	5	6	7	8	9
			date		Typ 7019/148 HD		fan circuit	uwe GmbH	drawing-no. A7000/459			UWEPLOR4
			drawed	NOS	Power of Chi			Buchstrasse 82 · Postfach 2020				
	25. Mai. 2004		checked	18. Okt. 2004	USA			D-73510 Schwäbisch Gmünd	ident.-no.: 266596			page 6f
modific.	date	name	norm		origin	repl. for	repl. by					68 pages

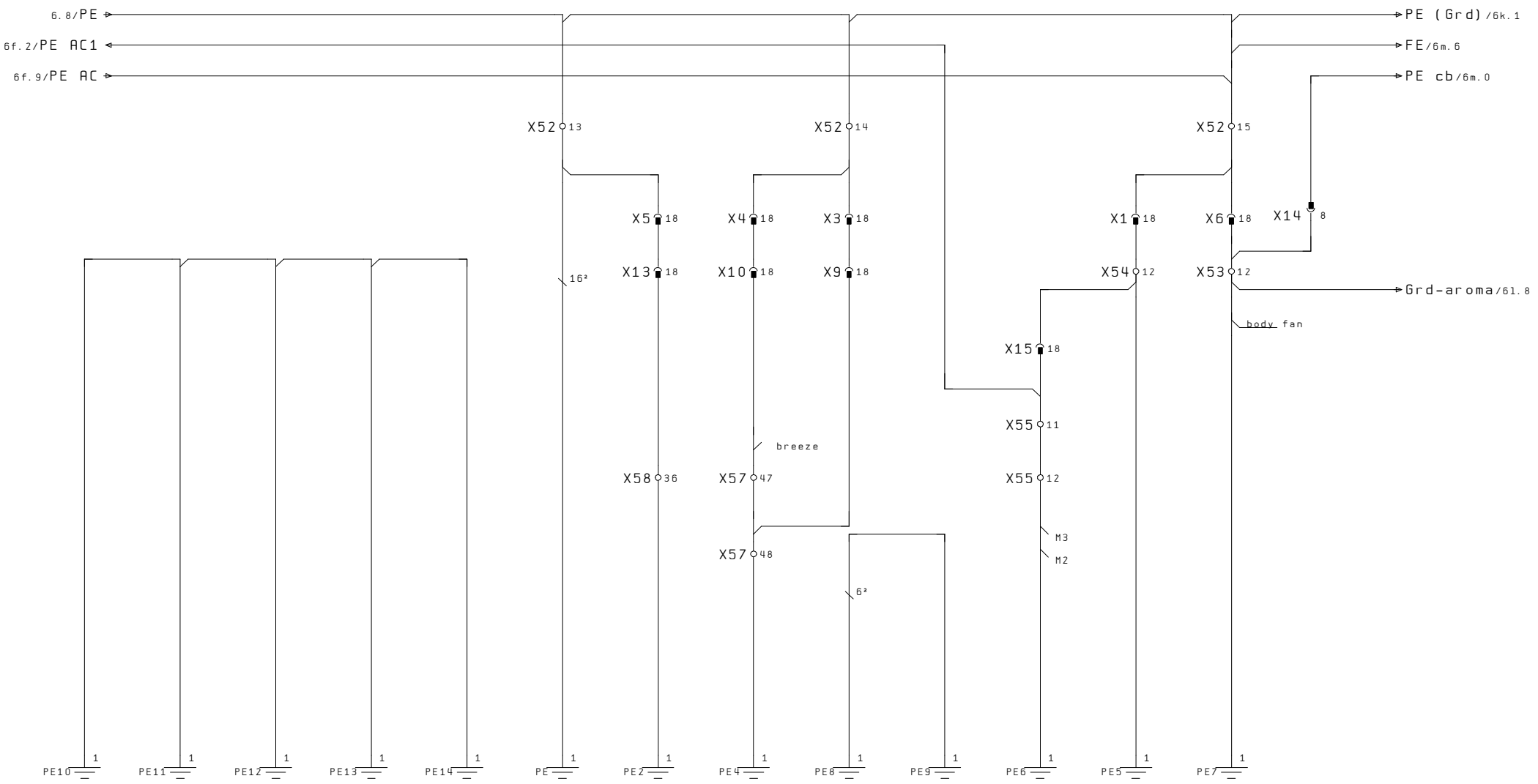

6f

6h

0	1			2	3	4	5	6	7	8	9
			date		Typ 7019/148 HD	PE	uwe GmbH	drawing-no. A7000/459		UWEPLOR4	
			drawed	NOS	Power of Chi		Buchstrasse 82 · Postfach 2020				
	25. Mai. 2004		checked	18. Okt. 2004	USA		D-73510 Schwäbisch Gmünd	ident.-no.: 266596		page 6g	
modific.	date	name	norm		origin	repl. for	repl. by			68 pages	

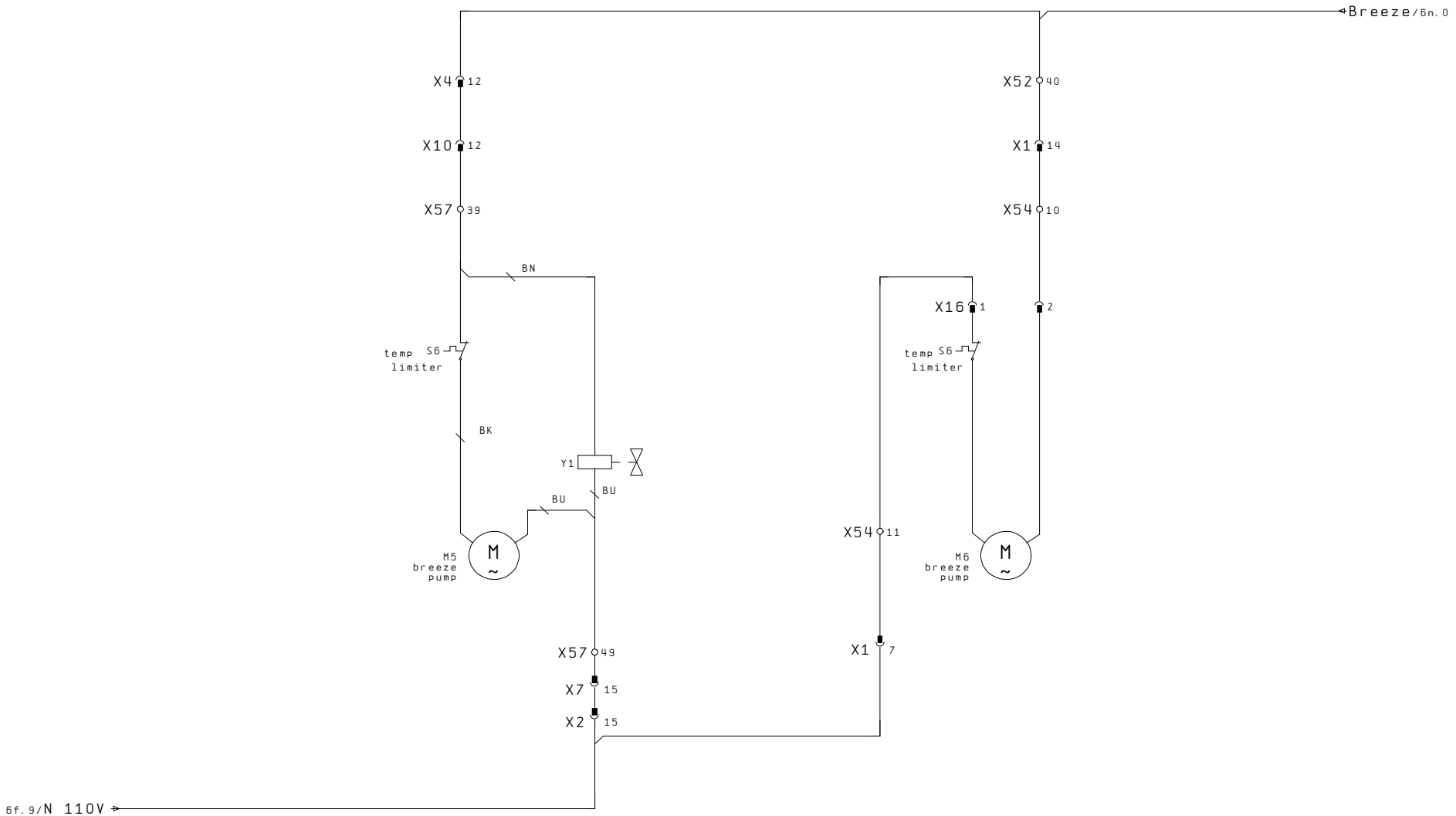

6g

6i

0	1				2	3	4	5	6	7	8	9
			date		Typ 7019/148 HD		breeze	uwe GmbH Buchstrasse 82 · Postfach 2020 D-73510 Schwäbisch Gmünd		drawing-no. A7000/459		UWEPLOR4
			drawed	MAD	Power of Chi							
	25. Mai. 2004		checked	18. Okt. 2004	USA					ident.-no.: 266596		page 6h
modific.	date	name	norm		origin	repl. for	repl. by					68 pages

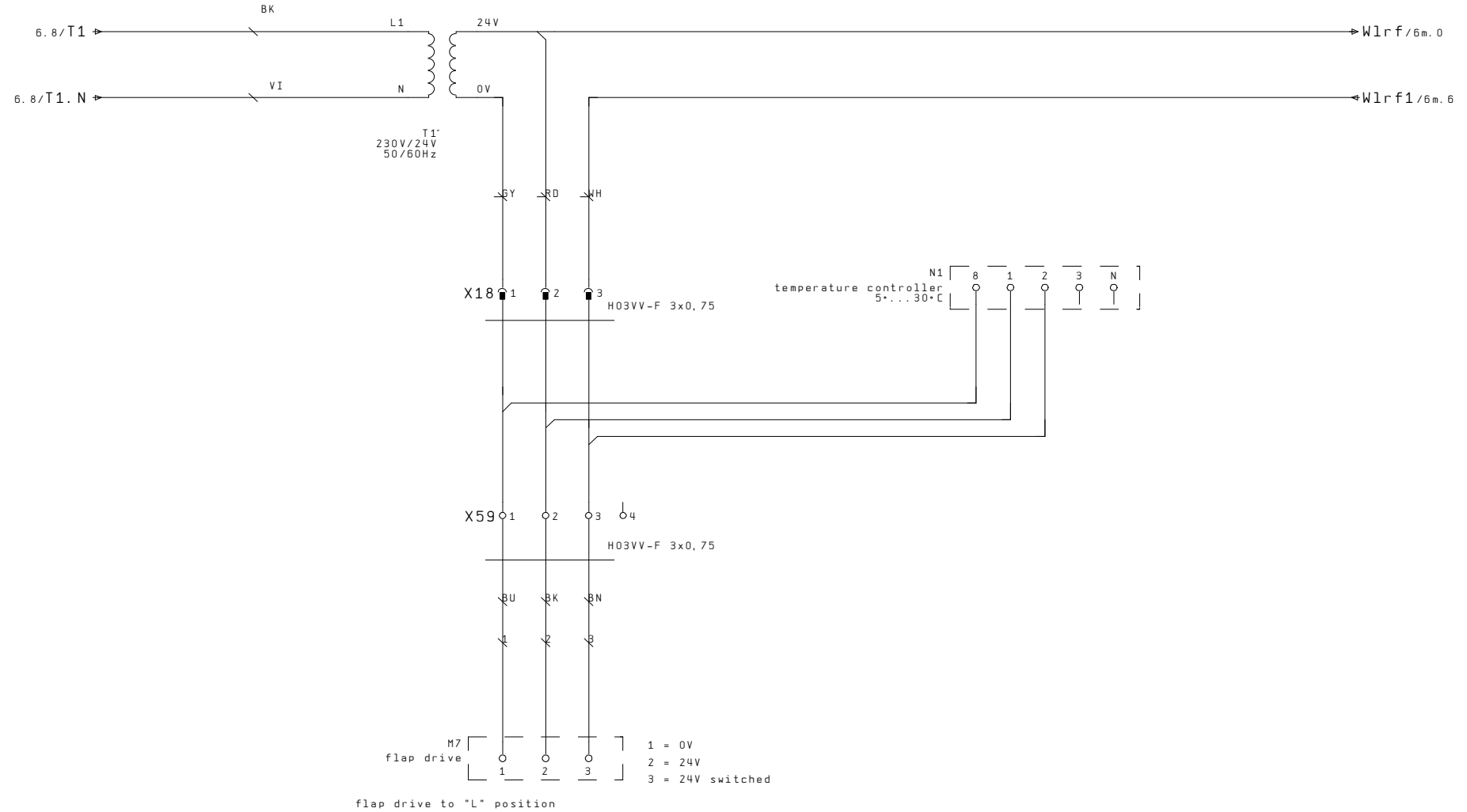

6h

6j

0	1				2	3	4	5	6	7	8	9
			date		Typ 7019/148 HD		vent control	uwe GmbH Buchstrasse 82 · Postfach 2020 D-73510 Schwäbisch Gmünd	drawing-no. A7000/459		UWEPLOR4
			drawed	NOS	Power of Chi						
	25. Mai. 2004		checked	18. Okt. 2004	USA				ident.-no.: 266596		page 6i
modific.	date	name	norm		origin	repl. for	repl. by				68 pages

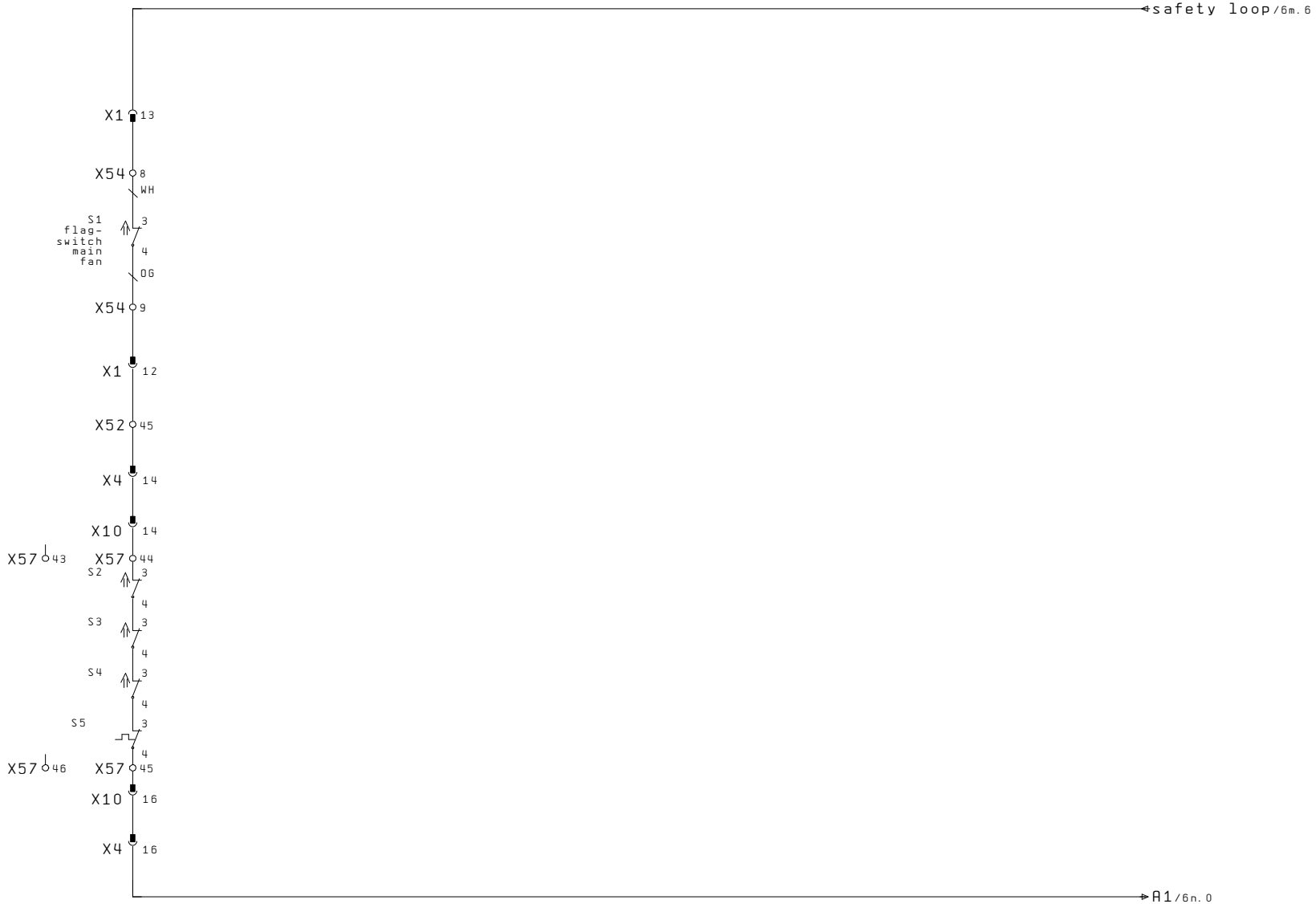

6i

6k

0	1				2	3	4	5	6	7	8	9
			date		Typ 7019/148 HD		safety loop	uwe GmbH Buchstrasse 82 · Postfach 2020 D-73510 Schwäbisch Gmünd		drawing-no. A7000/459		UWEPLOR4
			drawed	NOS	Power of Chi							
	25. Mai. 2004		checked	18. Okt. 2004	USA					ident.-no.: 266596		page 6j
modific.	date	name	norm		origin	repl. for	repl. by					68 pages

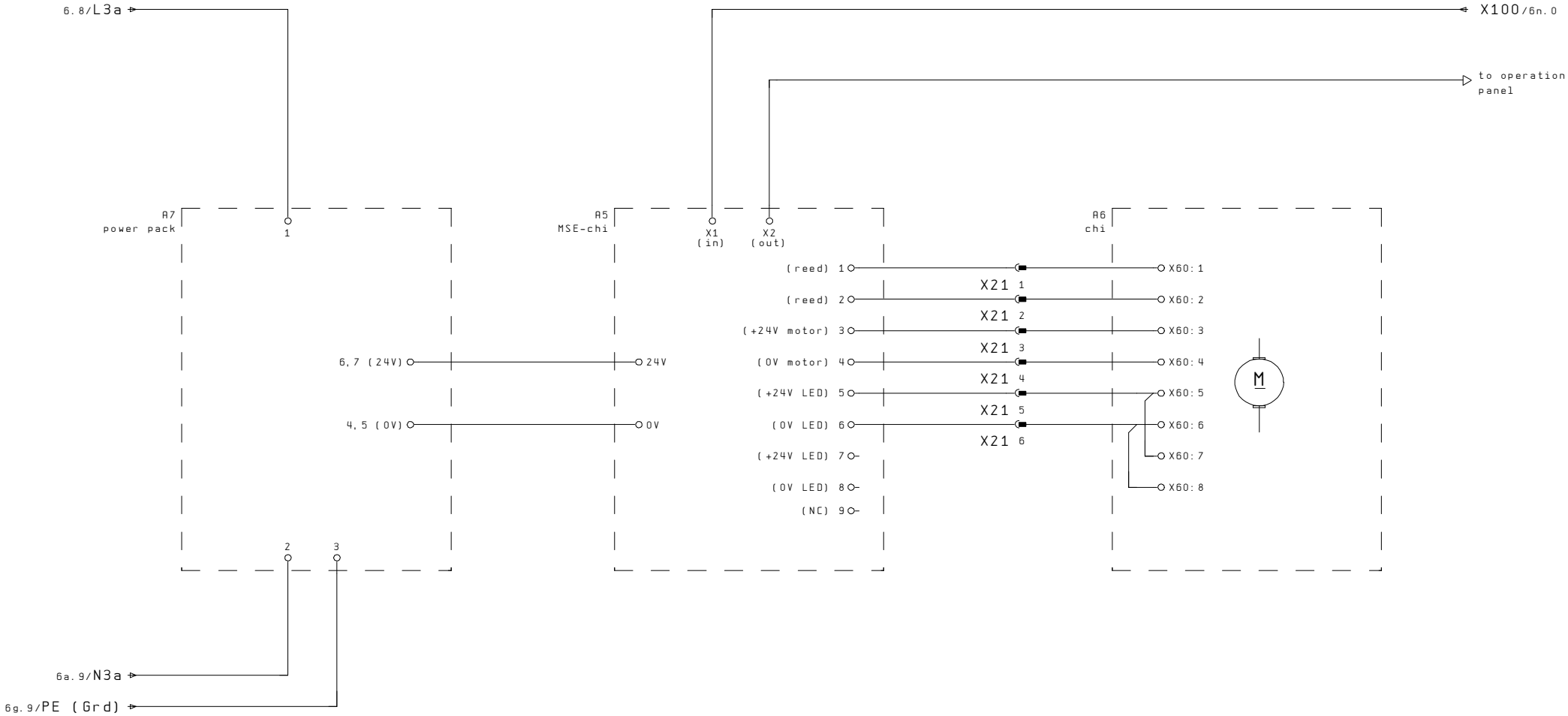

6j

61

0	1				2	3	4	5	6	7	8	9
			date		Typ 7019/148 HD Power of Chi USA		chi machine	uwe GmbH Buchstrasse 82 · Postfach 2020 D-73510 Schwäbisch Gmünd		drawing-no. A7000/459		UWEPLOR4
			drawed	NOS								
	25. Mai. 2004		checked	18. Okt. 2004						ident.-no.: 266596		page 6k 68 pages
modific.	date	name	norm		origin	repl. for	repl. by					

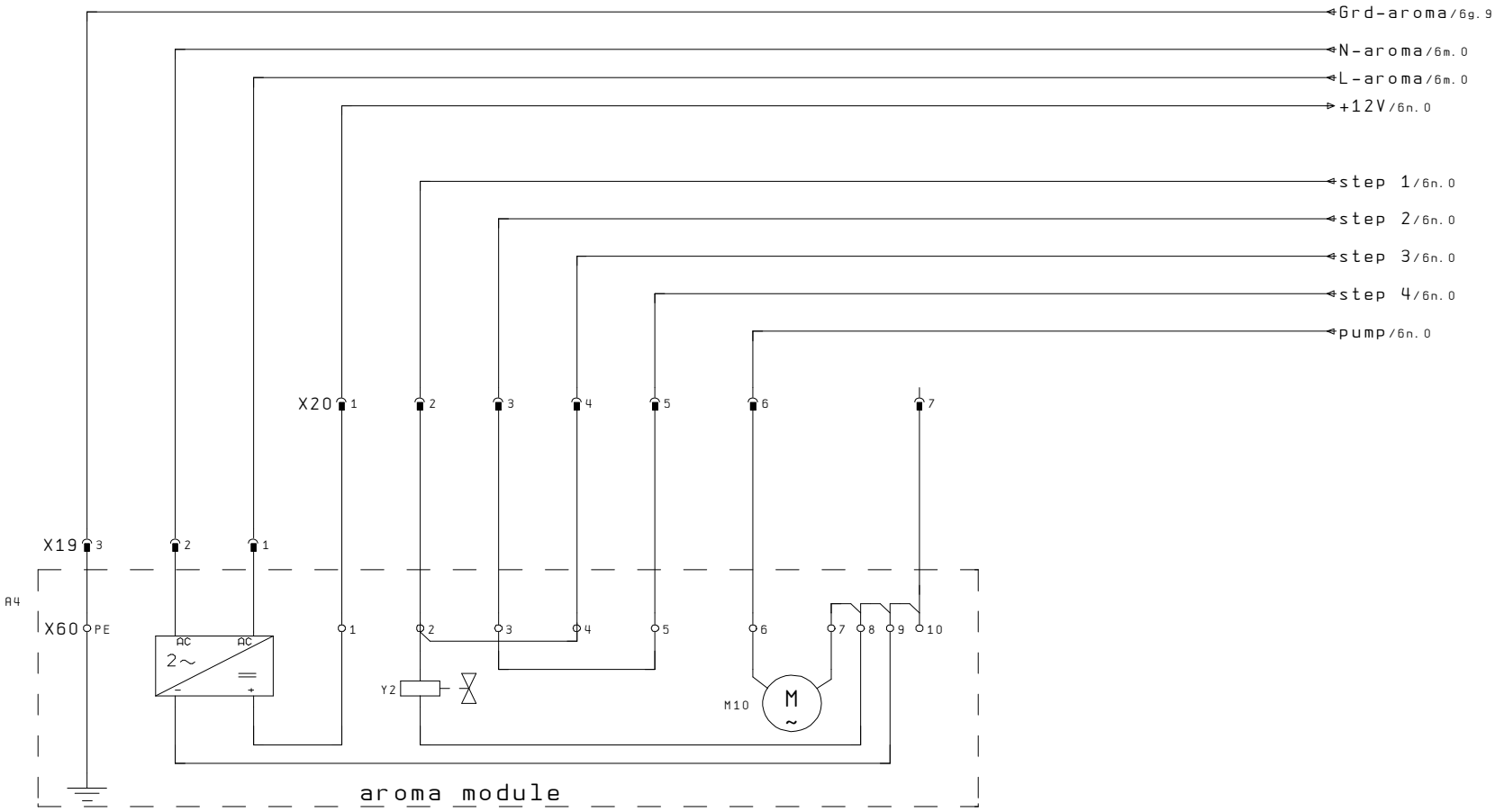

6k

6m

0	1				2	3	4	5	6	7	8	9
			date		Typ 7019/148 HD		aroma module	uwe GmbH		drawing-no. A7000/459		UWEPLOR4
			drawed	NOS	Power of Chi			Buchstrasse 82 · Postfach 2020				
	25. Mai. 2004		checked	18. Okt. 2004	USA			D-73510 Schwäbisch Gmünd		ident.-no.:		page 61
modific.	date	name	norm		origin	repl. for	repl. by			266596		68 pages

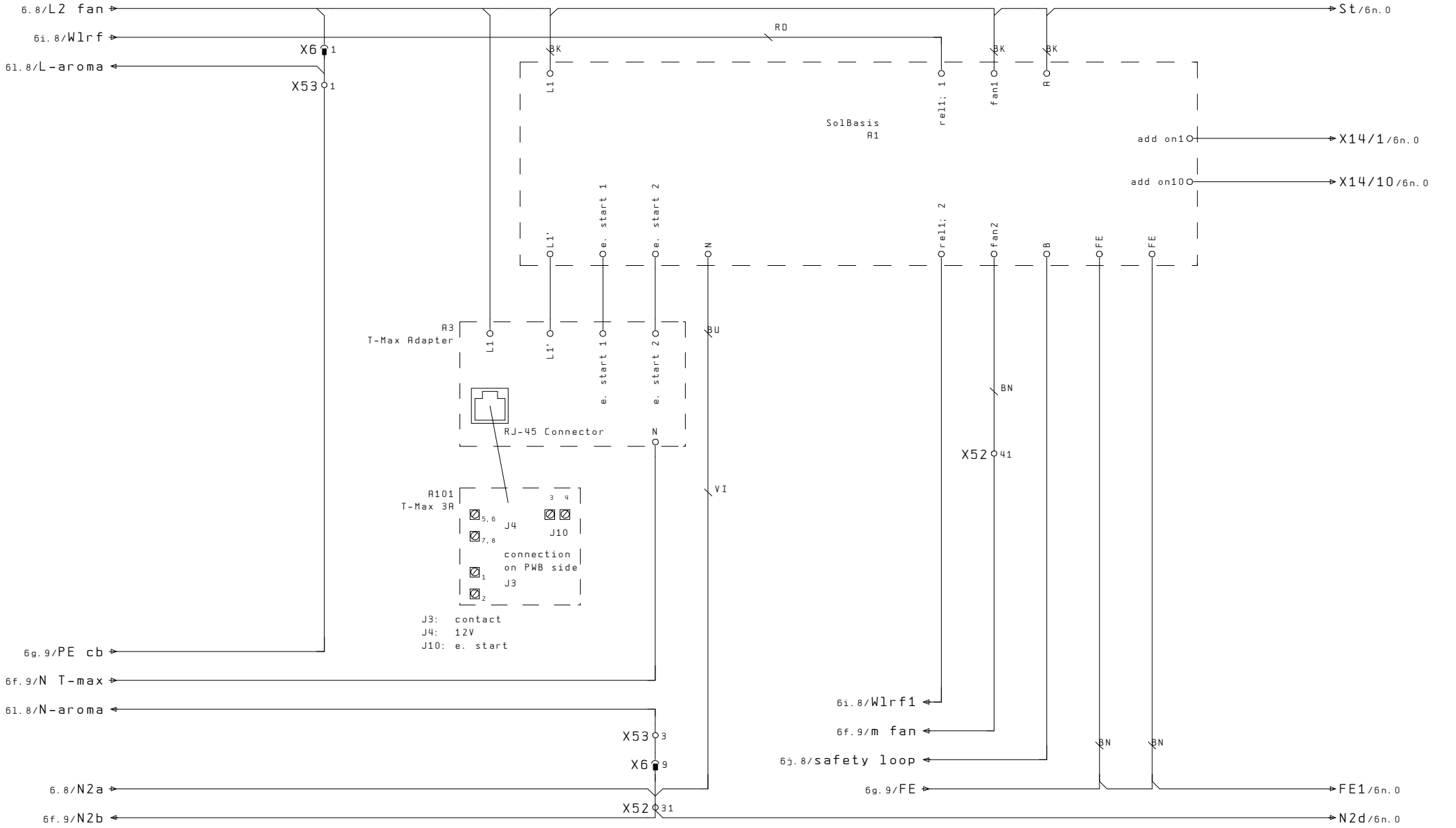

0	1	2	3	4	5	6	7	8	9

			date		Typ 7019/148 HD		control circuit	uwe GmbH	drawing-no. A7000/459	UWEPLOR4
			drawed	MAD	Power of Chi			Buchstrasse 82 · Postfach 2020		
	25. Mai. 2004		checked	18. Okt. 2004	USA			D-73510 Schwäbisch Gmünd	ident.-no.: 266596	page 6m
modific.	date	name	norm		origin	repl. for	repl. by			68 pages

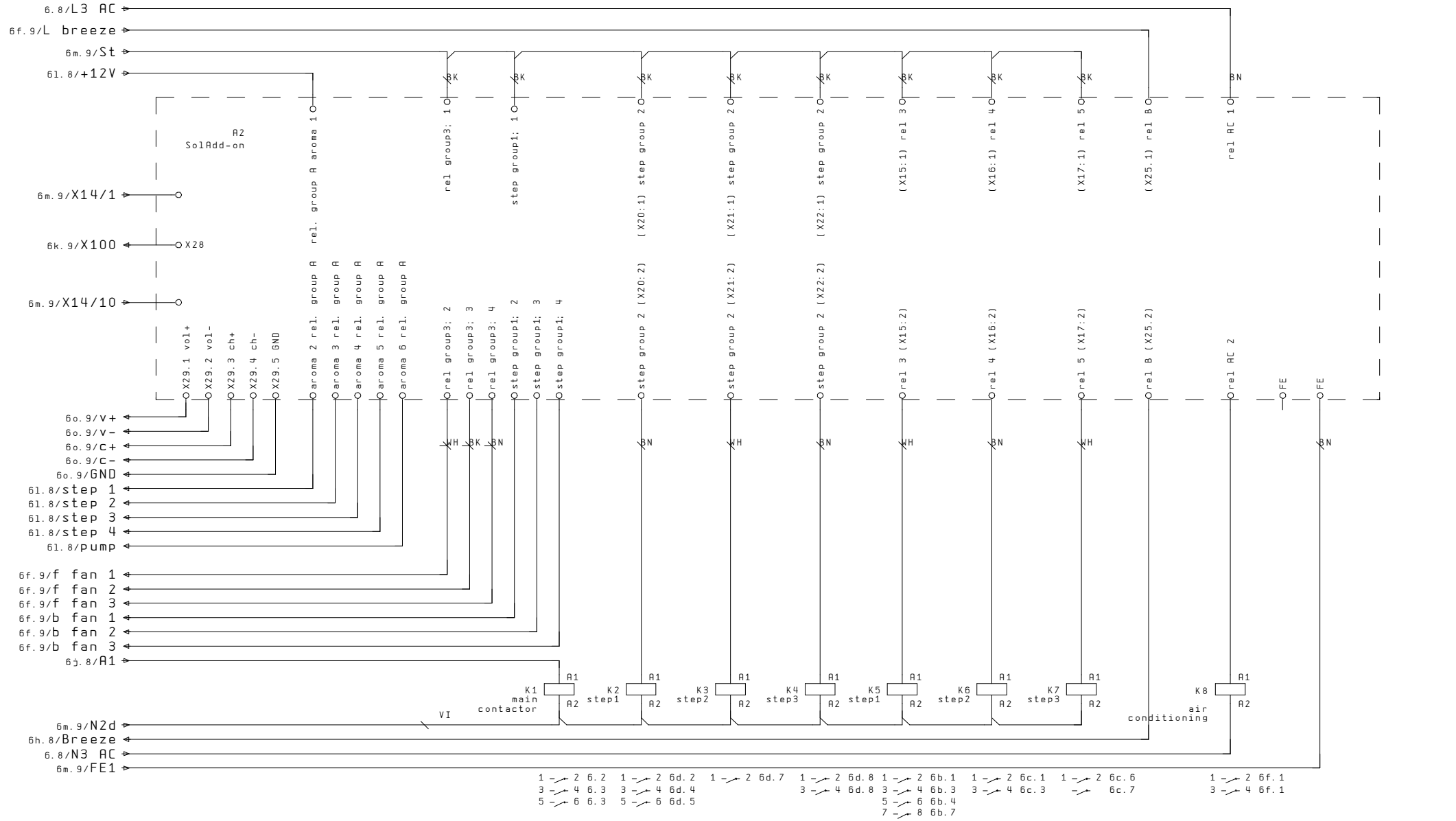

6m

6o

0	1				2	3	4	5	6	7	8	9
			date		Typ 7019/148 HD		control circuit	uwe GmbH	drawing-no. A7000/459		UWEPLOR4	
			drawed	NOS	Power of Chi			Buchstrasse 82 · Postfach 2020				
	25. Mai. 2004		checked	18. Okt. 2004	USA			D-73510 Schwäbisch Gmünd	ident.-no.: 266596		page 6n	
modific.	date	name	norm		origin	repl. for	repl. by				68 pages	

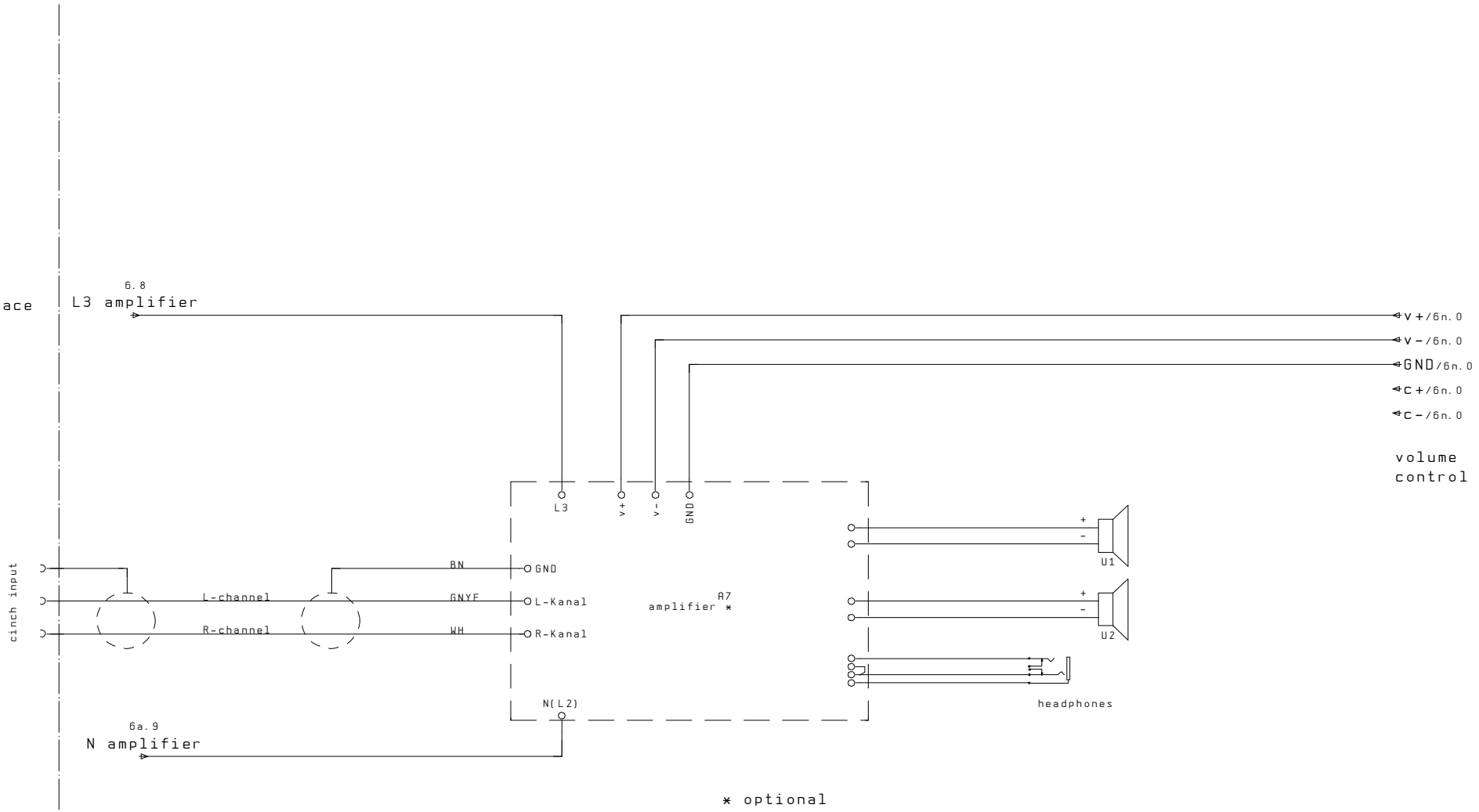

6n

7

0	1				2	3	4	5	6	7	8	9
			date		Typ 7019/148 HD Power of Chi USA		audio	uwe GmbH Buchstrasse 82 · Postfach 2020 D-73510 Schwäbisch Gmünd	drawing-no. A7000/459		UWEPLOR4
			drawed	NOS							
	25. Mai. 2004		checked	18. Okt. 2004					ident.-no.: 266596		page 6o
modific.	date	name	norm		origin	repl. for	repl. by				68 pages

terminal diagram

KLEM_ENG 2 12.12.2003

identification terminal block: **X1**

	page/path	6f.1	6f.1	6f.6	6f.6	6f.3	6h.5	6f.3	6f.4	6j.2	6j.2	6h.6	6g.7
WX1/X52	1x								1				
cabelname	cabeltype												
	connection	4	2	37	33	32	18	5	41	45	8	40	15
	finish designation	K8	K8	X52	X52	X52	X52	X54	X52	X52	SolBasis	X52	X52
	device connection												
	bridges												
	terminal number	1	2	3	4	6	7	9	11	12	13	14	18
	connection	1	2	3	7	6	11	46	4	9	8	10	12
	finish designation	X54	X54	X54	X54	X54	X54	X52	X54	X54	X54	X54	X54
cabelname	cabeltype												
	function text												

6o

8

0	1	2	3	4	5	6	7	8	9

KLEM_ENG 2 12.12.2003

terminal diagram

identification terminal block **X2**

	1	2	3	4	12	13	14	15	16
page/path	6b.1	6b.3	6b.4	6b.6	6b.1	6b.3	6b.4	6h.4	6b.6
cabelname / cabeltype									
connection	2	4	42	6	29	29	28	18	27
finish designation	K5	K5	X52	K5	X52	X52	X52	X52	X52
device connection									
bridges									
terminal number	1	2	3	4	12	13	14	15	16
connection	1	1	1	1	12	13	14	15	16
finish designation	L21	L27	L31	L37	X7	X7	X7	X7	X7

cabelname	cabeltype	1	2	3	4	12	13	14	15	16
	BK	x	x	x	x					

function text

7 9

0	1	2	3	4	5	6	7	8	9

date	10. Feb. 2004	Typ 7019/148 HD	X2	UWEPLOR4
drawed	NOS	Power of Chi		drawing-no. A7000/459
25. Mai. 2004 checked	18. Okt. 2004	USA		ident.-no.: 266596
modific. / date / name / norm		origin / repl. for	repl. by	page 8 / 68 pages

uwe GmbH
Buchstrasse 82 · Postfach 2020
D-73510 Schwäbisch Gmünd

terminal diagram

identification terminal block **X3**

page/path	6c.1	6c.3	6c.6	6c.7	6b.7	6c.4	6b.7	6c.1	6c.3	6c.6	6c.7	6g.5
cabelname / cabeltype												
connection	2	4	2	4	8	24	27	28	24	25	26	14
finish designation	K6	K6	K7	K7	K5	X52	X52	X52	X52	X52	X52	X52
device connection												
bridges												
terminal number	1	2	3	4	5	6	7	12	13	14	16	18
connection	1	1	1	1	1	6	7	12	13	14	16	18
finish designation	L22	L34	L44	L32	L43	X8	X8	X9	X9	X9	X9	X9
cabelname / cabeltype												
BK	x	x	x	x	x							
function text												

8 10

0 1 2 3 4 5 6 7 8 9

			date	10.Feb.2004	Typ 7019/148 HD	X3	UWEPLOR4
			drawed	NOS	Power of Chi		drawing-no. A7000/459
	25.Mai.2004		checked	18.Okt.2004	USA		ident.-no.: 266596
modific.	date	name	norm		origin / repl. for	repl. by	

uwe GmbH
Buchstrasse 82 · Postfach 2020
D-73510 Schwäbisch Gmünd

KLEM_ENG 2 12.12.2003

terminal diagram

identification terminal block **X4**

	page/path	6d.2	6d.4	6d.5	6d.7	6d.8	6d.2	6d.4	6d.6	6e.4	6f.2	6h.3	6e.4	6j.2	6j.2	6g.4
WX4/X52	1x										1					
cabelname	cabeltype															
	connection	2	4	6	2	2	23	26	26	19	41	40	30	14	A1	14
	finish designation	K2	K2	K2	K3	K4	X52	X52	X52	X52	X52	X52	X52	X10	K1	X52
	device connection															
	bridges															
	terminal number	1	2	3	4	5	7	8	9	10	11	12	13	14	16	18
	connection	1	1	1	1	1	7	8	9	10	11	12	13	45	16	18
	finish designation	L48A	L49A	L50A	L48E	L48F	X10	X10	X10	X10	X10	X10	X10	X52	X10	X10
cabelname	cabeltype															
	YE				x											
	RD					x										
	function text															

9 11

0 1 2 3 4 5 6 7 8 9

		date	10.Feb.2004	Typ 7019/148 HD	X4
		drawed	NOS	Power of Chi	
	25.Mai.2004	checked	18.Okt.2004	USA	
modific.	date	name	norm	origin / repl. for	repl. by

uwe GmbH
Buchstrasse 82 · Postfach 2020
D-73510 Schwäbisch Gmünd

UWEPLOR4

drawing-no. A7000/459

ident.-no.: 266596

KLEM_ENG 2 12.12.2003

terminal diagram

identification terminal block **X5**

page/path	6a.1	6a.3	6a.5	6a.7	6a.1	6a.3	6a.5	6a.8	6e.3	6e.3	6g.4
4mm²									x		
cabelname / cabeltype											
connection	39	39	38	38	35	35	34	34	21	10	13
finish designation	X52	X52	X52	X52	X52	X52	X52	X52	X52	X13	X52
device connection											
bridges											
terminal number	1	2	3	4	5	6	7	8	9	10	18
connection	1	1	1	1	5	6	7	8	9	36	18
finish designation	L1	L6	L11	L16	X13	X13	X13	X13	X13	X52	X13
cabelname / cabeltype											
function text											

10 12

0	1	2	3	4	5	6	7	8	9

modific.	date: 25. Mai. 2004	name	norm
date	10. Feb. 2004		
drawed	NOS		
checked	18. Okt. 2004		

Typ 7019/148 HD
Power of Chi
USA
origin | repl. for

X5
repl. by

uwe GmbH
Buchstrasse 82 · Postfach 2020
D-73510 Schwäbisch Gmünd

drawing-no. A7000/459
UWEPLOR4
ident.-no.: 266596

terminal diagram

identification terminal block **X6**

page/path	6m.2	6f.7	6f.8	6f.8	6f.8	6m.4	6g.7
cabelname / cabeltype							
connection	20				33	3	15
finish designation	X52	step group1: 2	step group1: 3	step group1: 4	X52	X53	X52
device connection							
bridges							
terminal number	1	5	6	7	8	9	18
connection	1	6	7	8	9	31	12
finish designation	X53	X53	X53	X53	X53	X52	X53
cabelname / cabeltype							
function text							

0 1 2 3 4 5 6 7 8 9

modific.	date	name	norm		origin	repl. for	repl. by
			date	10. Feb. 2004	Typ 7019/148 HD		X6
			drawed	NOS	Power of Chi		
	25. Mai. 2004		checked	18. Okt. 2004	USA		

uwe GmbH
Buchstrasse 82 · Postfach 2020
D-73510 Schwäbisch Gmünd

drawing-no. A7000/459

ident.-no.: 266596

UWEPLOR4

KLEM_ENG 2 12.12.2003

terminal diagram

identification terminal block **X7**

	1	2	3	4	5	6	7	8	9	10	11	12	13	14	15	16
page/path	6b.1	6b.1	6b.2	6b.3	6b.3	6b.4	6b.4	6b.5	6b.6	6b.7	6b.7	6b.1	6b.3	6b.4	6h.4	6b.6
cabelname / cabeltype																
connection	2	2	2	2	2	2	2	2	2	2	2	12	13	14	15	16
finish designation	L21	L23	L25	L27	L29	L31	L33	L35	L37	L39	L41	X2	X2	X2	X2	X2
device connection																
bridges																
terminal number	1	2	3	4	5	6	7	8	9	10	11	12	13	14	15	16
connection	1	3	5	7	9	11	13	15	17	19	21	23	24	25	49	26
finish designation	X57	X57	X57	X57	X57	X57	X57	X57	X57	X57	X57	X57	X57	X57	X57	X57
cabelname / cabeltype																
function text																

12 14

0	1	2	3	4	5	6	7	8	9

	date	10. Feb. 2004	Typ 7019/148 HD	X7	drawing-no. A7000/459
	drawed	NOS	Power of Chi		ident.-no.: 266596
25. Mai. 2004	checked	18. Okt. 2004	USA		
modific. / date / name	norm		origin / repl. for	repl. by	

uwe GmbH
Buchstrasse 82 · Postfach 2020
D-73510 Schwäbisch Gmünd

UWEPLOR4

terminal diagram

KLEM_ENG 2 12.12.2003

identification terminal block X8

page/path	6b.7	6c.6	6b.8	6c.4	6b.8	6c.4	6b.7
cabelname / cabeltype							
connection	2	2	2	2	2	6	7
finish designation	L43	L44	L45	L46	L47	X3	X3
device connection							
bridges							
terminal number	1	2	3	4	5	6	7
connection	1	4	3	2	5	7	6
finish designation	X56	X56	X56	X56	X56	X56	X56
cabelname / cabeltype							
function text							

0 1 2 3 4 5 6 7 8 9

modific.	date	name	norm		origin	repl. for	repl. by			
	25.Mai.2004		date	10.Feb.2004	Typ 7019/148 HD		X8	uwe GmbH Buchstrasse 82 · Postfach 2020 D-73510 Schwäbisch Gmünd	drawing-no. A7000/459	UWEPLOR4
			drawed	NOS	Power of Chi				ident.-no.: 266596	page 14
			checked	18.Okt.2004	USA					68 pages

terminal diagram

identification terminal block **X9**

	1	2	3	4	5	6	7	8	9	10	11	12	13	14	15	16
page/path	6c.1	6c.6	6c.2	6c.6	6c.2	6c.7	6c.3	6c.8	6c.3	6c.8	6c.4	6c.1	6c.3	6c.6	6c.7	6g.5
cabelname / cabeltype																
connection	2	2	2	2	2	2	2	2	2	2	2	12	13	14	16	18
finish designation	L22	L24	L26	L28	L30	L32	L34	L36	L38	L40	L42	X3	X3	X3	X3	X3
device connection																
bridges																
terminal number	1	2	3	4	5	6	7	8	9	10	11	12	13	14	16	18
connection	2	4	6	8	10	12	14	16	18	20	22	27	28	29	30	48
finish designation	X57	X57	X57	X57	X57	X57	X57	X57	X57	X57	X57	X57	X57	X57	X57	X57
cabelname / cabeltype																
function text																

14 16

KLEM_ENG 2 12.12.2003

modific.	date	name	norm		origin	repl. for	repl. by		
			date	10. Feb. 2004	Typ 7019/148 HD		X9	uwe GmbH Buchstrasse 82 · Postfach 2020 D-73510 Schwäbisch Gmünd	drawing-no. A7000/459
			drawed	NOS	Power of Chi				ident.-no.: 266596
	25. Mai. 2004		checked	18. Okt. 2004	USA				UWEPLOR4

KLEM_ENG 2 12.12.2003

terminal diagram

identification terminal block: X10

	page/path	6d.2	6d.4	6d.5	6d.2	6d.4	6d.6	6d.2	6d.4	6d.6	6e.4	6f.2	6h.3	6e.4	6j.2	6j.2	6g.4
cabelname	cabeltype																
	connection	2	2	2	2	2	2	7	8	9	10	11	12	13	44	16	18
	finish designation	L48A	L49A	L50A	L48E	L49E	L50E	X4	X4	X4	X4	X4	X4	X4	X57	X4	X4
	device connection																
	bridges																
	terminal number	1	2	3	4	5	6	7	8	9	10	11	12	13	14	16	18
	connection	31	32	33	31	32	33	34	35	36	37	38	39	40	14	45	47
	finish designation	X57	X57	X57	X57	X57	X57	X57	X57	X57	X57	X57	X57	X57	X4	X57	X57
cabelname	cabeltype																
	BN							x	x								
	function text																

0 1 2 3 4 5 6 7 8 9

modific.	date	name	norm		origin	repl. for	repl. by		
			date	10. Feb. 2004	Typ 7019/148 HD		X10	uwe GmbH, Buchstrasse 82 · Postfach 2020, D-73510 Schwäbisch Gmünd	drawing-no. A7000/459
			drawed	NOS	Power of Chi				ident.-no.: 266596
	25. Mai. 2004		checked	18. Okt. 2004	USA				UWEPLOR4

KLEM_ENG 2 12.12.2003

terminal diagram

identification terminal block **X12**

	T1	T2	T3	T4	T5	T6	T7	T8	T9	T10	T11	T12	T13	T14	T15	T16	T17	T18
page/path	6a.1	6a.1	6a.1	6a.2	6a.2	6a.3	6a.3	6a.3	6a.4	6a.4	6a.5	6a.5	6a.6	6a.6	6a.6	6a.7	6a.8	6a.8
cabelname / cabeltype																		
connection	2	2	2	2	2	2	2	2	2	2	2	2	2	2	2	2	2	2
finish designation	L1	L2	L3	L4	L5	L6	L7	L8	L9	L10	L11	L12	L13	L14	L15	L16	L17	L18
device connection																		
bridges																		
terminal number	1	2	3	4	5	6	7	8	9	10	11	12	13	14	15	16	17	18
connection	1	2	3	4	5	6	7	8	9	10	11	12	13	14	15	16	17	18
finish designation	X58	X58	X58	X58	X58	X58	X58	X58	X58	X58	X58	X58	X58	X58	X58	X58	X58	X58
cabelname / cabeltype																		
function text																		

16 18

0 1 2 3 4 5 6 7 8 9

modific.	date	name	norm		origin	repl. for	repl. by
			date	10.Feb.2004	Typ 7019/148 HD		X12
			drawed	NOS	Power of Chi		
	25.Mai.2004		checked	18.Okt.2004	USA		

uwe GmbH
Buchstrasse 82 · Postfach 2020
D-73510 Schwäbisch Gmünd

drawing-no. A7000/459

UWEPLOR4

ident.-no.: 266596

KLEM_ENG 2 12.12.2003

terminal diagram

identification terminal block

X13

page/path	6a.8	6a.9	6a.1	6a.3	6a.5	6a.8	6e.3	6e.3	6a.2	6a.4	6a.7	6a.9	6g.4
cabelname / cabeltype													
connection	2	2	5	6	7	8	9	10	1	1	1	1	18
finish designation	L19	L20	X5	X5	X5	X5	X5	X5	L5	L10	L15	L20	X5
device connection													
bridges													
terminal number	1	2	5	6	7	8	9	10	11	12	13	14	18
connection	19	20	21	22	23	24	27	28	25	29	30	26	36
finish designation	X58	X58	X58	X58	X58	X58	X58	X58	X58	X58	X58	X58	X58
cabelname / cabeltype													
BU								x					
function text													

17

19

0	1	2	3	4	5	6	7	8	9

KLEM_ENG 2 12.12.2003

terminal diagram

identification terminal block

X14

page/path	6g.8
cabelname / cabeltype	
connection	12
finish designation	X53
device connection	
bridges	
terminal number	8
connection	1
finish designation	X53
cabelname / cabeltype	
function text	

18 20

modific.	date	name	norm		origin	repl. for	repl. by
			date	10.Feb.2004	Typ 7019/148 HD		X14
			drawed	NOS	Power of Chi		
	25.Mai.2004		checked	18.Okt.2004	USA		

uwe GmbH
Buchstrasse 82 · Postfach 2020
D-73510 Schwäbisch Gmünd

drawing-no. A7000/459

ident.-no.: 266596

UWEPLOR4

terminal diagram

identification terminal block **X15**

page/path	6f.6	6f.6	6f.1	6f.1	6f.4	6f.4	6g.6
cabelname / cabeltype							
connection	3	7	1	2	4	6	12
finish designation	X54	X54	X54	X54	X54	X54	X54
device connection							
bridges							
terminal number	1	2	3	4	5	6	18
connection	2	3	4	5	6	7	11
finish designation	X55	X55	X55	X55	X55	X55	X55
cabelname / cabeltype							
function text							

		date	10. Feb. 2004	Typ 7019/148 HD	X15
		drawed	NOS	Power of Chi	
	25. Mai. 2004	checked	18. Okt. 2004	USA	
modific.	date	name	norm	origin / repl. for	repl. by

uwe GmbH
Buchstrasse 82 · Postfach 2020
D-73510 Schwäbisch Gmünd

drawing-no. A7000/459
ident.-no.: 266596
UWEPLOR4
page 20
68 pages

KLEM_ENG 2 12.12.2003

terminal diagram

identification terminal block

X16

page/path	6h.6	6h.6
cabeltype		
connection	11	10
finish designation	X54	X54
device connection		
bridges		
terminal number	1	2
connection		
finish designation	S6	M6
cabeltype		
function text		

cabelname

cabelname

0 1 2 3 4 5 6 7 8 9

			date	10.Feb.2004	Typ 7019/148 HD	X16	uwe GmbH Buchstrasse 82 · Postfach 2020 D-73510 Schwäbisch Gmünd
			drawed	NOS	Power of Chi		drawing-no. A7000/459
	25.Mai.2004		checked	18.Okt.2004	USA		ident.-no.: 266596
modific.	date	name	norm		origin / repl. for	repl. by	UWEPLOR4 page 21 / 68 pages

KLEM_ENG 2 12.12.2003

terminal diagram

	page/path	6f. 1	6f. 1	6f. 1	
cabelname	cabeltype				
identification terminal block X17	connection	4	5	11	
	finish designation	X55	X55	X55	
	device connection				
	bridges				
	terminal number	1	2	3	
	connection	L	N	PE	
	finish designation	AC	AC	AC	
cabelname	cabeltype				
WX17/AC	1x	1			
	function text				

21 23

0	1	2	3	4	5	6	7	8	9

			date	10. Feb. 2004	Typ 7019/148 HD Power of Chi USA	X17	uwe GmbH Buchstrasse 82 · Postfach 2020 D-73510 Schwäbisch Gmünd	drawing-no. A7000/459
			drawed	NOS				UWEPLOR4
	25. Mai. 2004		checked	18. Okt. 2004			ident.-no.: 266596	page 22
modific.	date	name	norm		origin	repl. for	repl. by	68 pages

KLEM_ENG 2 12.12.2003

terminal diagram

	page/path	6i.3	6i.4	6i.4
WX18/SolBasis	1x			1
	RD		x	
	GY	x		
cabelname	cabeltype			
identification terminal block X18	connection	0V	24V	-Xe11:2
	finish designation	T1	T1	SolBasis
	device connection			
	bridges			
	terminal number	1	2	3
	connection	1	2	3
	finish designation	X59	X59	X59
cabelname	cabeltype			
WX18/X59	3x0.75mm²	1	2	
WX18/X59.1	3x0.75mm²			1
	function text			

22 24

0 1 2 3 4 5 6 7 8 9

		date	10.Feb.2004	Typ 7019/148 HD
		drawed	NOS	Power of Chi
	25.Mai.2004	checked	18.Okt.2004	USA
modific.	date	name	norm	origin

repl. for

X18

repl. by

uwe GmbH
Buchstrasse 82 · Postfach 2020
D-73510 Schwäbisch Gmünd

UWEPLOR4

drawing-no. A7000/459

ident.-no.: 266596

terminal diagram

KLEM_ENG 2 12.12.2003

identification terminal block X19

	Terminal 1	Terminal 2	Terminal 3
page/path	61.2	61.2	61.1
cabelname / cabeltype			
connection	1	3	12
finish designation	X53	X53	X53
device connection			
bridges			
terminal number	1	2	3
connection			PE
finish designation	A4	A4	A4-X60
cabelname / cabeltype			
function text			

modific.	date	name	norm		origin	repl. for	repl. by
			date	10.Feb.2004	Typ 7019/148 HD		X19
			drawed	NOS	Power of Chi		
	25.Mai.2004		checked	18.Okt.2004	USA		

uwe GmbH
Buchstrasse 82 · Postfach 2020
D-73510 Schwäbisch Gmünd

drawing-no. A7000/459

ident.-no.: 266596

UWEPLOR4

terminal diagram

KLEM_ENG 2 12.12.2003

identification terminal block: **X20**

	1	2	3	4	5	6	7
page/path	61.3	61.3	61.4	61.4	61.4	61.5	61.6
cabelname / cabeltype							
connection	aroma1						
finish designation	rel.groupA	rel. group A	rel. group A	rel. group A	rel. group A	rel. group A	
device connection		aroma 2	aroma 3	aroma 4	aroma 5	aroma 6	
bridges							
terminal number	1	2	3	4	5	6	7
connection	1	2	3	4	5	6	10
finish designation	A4-X60	A4-X60	A4-X60	A4-X60	A4-X60	A4-X60	A4-X60
cabelname / cabeltype							
function text							

0 1 2 3 4 5 6 7 8 9

		date	10.Feb.2004	Typ 7019/148 HD	X20	uwe GmbH Buchstrasse 82 · Postfach 2020 D-73510 Schwäbisch Gmünd
		drawed	NOS	Power of Chi		drawing-no. A7000/459
	25.Mai.2004	checked	18.Okt.2004	USA		ident.-no.: 266596
modific.	date	name	norm	origin / repl. for	repl. by	UWEPLOR4

terminal diagram

KLEM_ENG 2 12.12.2003

identification terminal block

X21

terminal number	page/path	connection	finish designation	device connection	bridges	connection	finish designation	cabelname	cabeltype	function text
1	6k.6	A5	(Speed)1			A6X60:1				
2	6k.6	A5	(Speed)2			A6X60:2				
3	6k.6	A5	(+24V motor)3			A6X60:3				
4	6k.6	A5	(0V motor)4			A6X60:4				
5	6k.6	A5	(+24V LED)5			A6X60:5				
6	6k.6	A5	(0V LED)6			A6X60:6				

0 1 2 3 4 5 6 7 8 9

modific.	date: 25.Mai.2004	name	date: 10.Feb.2004 / drawed: NOS / checked: 18.Okt.2004 / norm	Typ 7019/148 HD / Power of Chi / USA / origin / repl. for	X21 / repl. by

uwe GmbH
Buchstrasse 82 · Postfach 2020
D-73510 Schwäbisch Gmünd

drawing-no. A7000/459

ident.-no.: 266596

UWEPLOR4

KLEM_ENG 2 12.12.2003

terminal diagram

identification terminal block

X50

	N	L1	L2	L3	PE
page/path	6.1	6.1	6.1	6.1	6.2
cabelname / cabeltype					
connection					
finish designation					
device connection					
bridges					
terminal number	N	L1	L2	L3	PE
connection					PE
finish designation	F02	F01	F01	F01	X51
cabelname / cabeltype					
function text					

terminal diagram

KLEM_ENG 2 12.12.2003

identification terminal block

X51

page/path	6.1	6.1	6.1	6.1	6.2
cabeltype					
connection					PE
finish designation	F02	F02	F02	F02	X50
device connection					
bridges					
terminal number	N	L1	L2	L3	PE
connection		1	3	5	13
finish designation		X52	X52	X52	X52
cabeltype					
10mm²				x	
function text					

cabelname

cabelname

0 1 2 3 4 5 6 7 8 9

modific.	date	name	norm		origin	repl. for	repl. by
	25. Mai. 2004		date	10. Feb. 2004	Typ 7019/148 HD		X51
			drawed	NOS	Power of Chi		
			checked	18. Okt. 2004	USA		

uwe GmbH
Buchstrasse 82 · Postfach 2020
D-73510 Schwäbisch Gmünd

drawing-no. A7000/459

ident.-no.: 266596

UWEPLOR4

KLEM_ENG 2 12.12.2003

terminal diagram

identification terminal block

X52

Upper cable types: VI, BU, BN, 10mm² — cabelname / cabeltype
Lower cable types: 4mm², 16mm², BK, BU, VI, BN — cabelname / cabeltype

terminal number	page/path	upper cable (x)	connection (upper)	finish designation (upper)	device connection	connection (lower)	finish designation (lower)	lower cable (x)
1	6.1		L1	X51				
2	6.1					1	K1	4mm²
3	6.1		L2	X51				
4	6.1							
5	6.2	10mm²	L3	X51				
6	6.2							
7	6.1							
8	6.1							
9	6.1							
10	6.1							
11	6.2							
12	6.2							
13	6g.3		PE	X51		1 / 18	PE / X5	16mm²
14	6g.5					18 / 18	X3 / X4	
15	6g.7	BN	FE / 3	SolBasis / A7		18 / 18	X6 / X1	
16	6f.0			Grd				
17	6f.1			L / (X25.A2)relB		3	K8	
18	6f.0		1	N / K8		15 / 7	X2 / X1	
19	6.3		10	X4		3 / L1	K1 / T1	4mm² / BK
20	6.3					1 / L1	X6 / SolBasis	BK
21	6.3		1	A7		5 / 9	K1 / X5	4mm²
22	6.3		L3	A7amplifier		relAC1	A2	
23	6.1		N / 7	C7a / X4				
24	6c.3		13 / 6	X3 / X3		N	C6	BU
25	6c.6	BU	14 / N	X3 / C7				
26	6c.7		16	X3		9 / N	X4 / C9	BU
27	6b.7		7	X3		16 / N	X2 / C5	
28	6b.7		14	X2		N / 12	C5a / X3	
29	6b.1	VI	12 / N	X2 / C3		13	X2	
30	6.1					13 / N	X4 / T1	VI
31	6m.4	BU	9 / N	X6 / SolBasis		A2	K1	VI
32	6f.3	VI	6	X1 / C11				
33	6f.8		8 / 4	X6 / X1			N	
34	6a.5		7 / 8	X5 / X5		2	A7 / N(L2)	
35	6a.1		5 / 6	X5 / X5				
36	6.2					10 / A2	X5 / K8	
37	6f.6	BN	3	X1 / C13			rel group3: 4 / C12	BN / BN
38	6a.5					3 / 4	X5 / X5	
39	6a.1		6	K1		1 / 2	X5 / X5	

function text

			date	10.Feb.2004	Typ 7019/148 HD	X52	uwe GmbH
			drawed	NOS	Power of Chi		Buchstrasse 82 · Postfach 2020
	25.Mai.2004		checked	18.Okt.2004	USA		D-73510 Schwäbisch Gmünd
modific.	date	name	norm		origin / repl. for	repl. by	

KLEM_ENG 2 12.12.2003

terminal diagram

identification terminal block **X52**

		40	41	42	43	44	45	46
	page/path	6h.6	6m.6	6b.4	6f.6	6f.7	6j.2	6f.3
	WH					x		
	BU				x			
	BN		x					
cabelname	cabeltype							
	connection	12	fan2	6			12	9
	finish designation	X4 / rel B (X25.2)	SolBasis	K5	C12	C13	X1	X1
	device connection							
	bridges							
	terminal number	40	41	42	43	44	45	46
	connection	14	11 / 11	3 / L			14	
	finish designation	X1	X4 / X1	X2 / C4	rel group3: 3	rel group3: 2	X4	C11
cabelname	cabeltype							
WX4/X52	1x		1					
WX1/X52	1x		/ 1					
	BK			/ x	x			x
	WH					x		
	function text							

29 31

0	1	2	3	4	5	6	7	8	9

			date	10.Feb.2004	Typ 7019/148 HD	X52	uwe GmbH	drawing-no. A7000/459
			drawed	NOS	Power of Chi		Buchstrasse 82 · Postfach 2020	ident.-no.: 266596
	25.Mai.2004		checked	18.Okt.2004	USA		D-73510 Schwäbisch Gmünd	page 30
modific.	date	name	norm		origin / repl. for	repl. by		68 pages

UWEPLOR4

terminal diagram

identification terminal block **X53**

	1	3	6	7	8	9	10	11	12
page/path	6m.2	6m.4	6f.7	6f.8	6f.8	6f.8	6f.9	6f.9	6g.7
cabelname / cabeltype									
connection	1 / 1	2	5	6	7				18 / 8
finish designation	X6 / X19	X19	X6	X6	X6	M4	C15	M4	X6 / X14
device connection									
bridges									
terminal number	1	3	6	7	8	9	10	11	12
connection	8	9				8			1 / 3
finish designation	X14	X6	M4	M4	M4	X6	M4	C15	PE7 / X19
cabelname / cabeltype									
WH			x						
GY				x					
BK					x				
YE							x		
function text									

30 32

modific.	date	name	norm		origin	repl. for	repl. by
	25.Mai.2004		date	10.Feb.2004	Typ 7019/148 HD		X53
			drawed	NOS	Power of Chi		
			checked	18.Okt.2004	USA		

uwe GmbH
Buchstrasse 82 · Postfach 2020
D-73510 Schwäbisch Gmünd

drawing-no. A7000/459
ident.-no.: 266596
UWEPLOR4

terminal diagram

KLEM_ENG 2 12.12.2003

identification terminal block **X54**

		1	2	3	4	5	6	7	8	9	10	11	12
	page/path	6f.1	6f.1	6f.6	6f.4	6f.3	6f.3	6f.6	6j.2	6j.2	6h.6	6h.5	6g.7
	OG									x			
	BK						x						
	BN					x							
cabelname	cabeltype												
	connection	1	4	3	11 5			2	13	4	14	1	18
	finish designation	X1	X15	X1	X1 X15	M1	M1	X15	X1	S1	X1	X16	X1
	device connection												
	bridges												
	terminal number	1	2	3	4	5	6	7	8	9	10	11	12
	connection	3	2	1		9	6 6	4	3	12	2	7	1 18
	finish designation	X15	X1	X15	M1	X1	X1 X15	X1	S1	X1	X16	X1	PE5 X15
cabelname	cabeltype												
WX54/M1	1x				1								
	WH								x				
	function text												

31

33

KLEM_ENG 2 12.12.2003

terminal diagram

identification terminal block: X55

	1	2	3	4	5	6	7	8	11	12
page/path	6f. 6	6f. 6	6f. 6	6f. 1	6f. 1	6f. 4	6f. 4	6f. 6	6g. 6	6g. 6
BK			X							
cabelname										
cabeltype										
connection		1		3	2	5	3		18	3
finish designation	C14	X15	M3 C14	X15	X17	X15	X55a M9	M9	X15	X17
device connection										
bridges										
terminal number	1	2	3	4	5	6	7	8	11	12
connection			2	1	4	1	6			1
finish designation	M3	M3	X15	X17	X15	X55a M9	X15 C16	C16		PE6
cabelname										
cabeltype										
function text										

32 34

0	1	2	3	4	5	6	7	8	9

			date	10. Feb. 2004	Typ 7019/148 HD Power of Chi USA	X55	UWEPLOR4
			drawed	NOS			
	25. Mai. 2004		checked	18. Okt. 2004			
modific.	date	name	norm		origin	repl. for	repl. by

uwe GmbH
Buchstrasse 82 · Postfach 2020
D-73510 Schwäbisch Gmünd

drawing-no. A7000/459

ident.-no.: 266596

terminal diagram

identification terminal block X56

	Terminal 1	Terminal 2	Terminal 3	Terminal 4	Terminal 5	Terminal 6	Terminal 7
page/path	6b.7	6c.4	6b.8	6c.6	6b.8	6b.7	6c.4
cabelname / cabeltype							
connection	1	4	3	2	5	7	6
finish designation	X8	X8	X8	X8	X8	X8	X8
device connection							
bridges							
terminal number	1	2	3	4	5	6	7
connection	1	1	1	1	1	2	2
finish designation	E43	E46	E45	E44	E47	E43	E46
cabelname / cabeltype							
BU						X	X
function text							

0	1	2	3	4	5	6	7	8	9

modific.	date	name	norm		origin	repl. for	repl. by		
			date	10. Feb. 2004	Typ 7019/148 HD		X56	uwe GmbH	drawing-no. A7000/459
			drawed	NOS	Power of Chi			Buchstrasse 82 · Postfach 2020	UWEPLOR4
	25. Mai. 2004		checked	18. Okt. 2004	USA			D-73510 Schwäbisch Gmünd	ident.-no.: 266596
									page 34 / 68 pages

terminal diagram

KLEM_ENG 2 12.12.2003

function text	cabelname	YE	BK	BN	GY	VI	BU	finish designation	connection	terminal number	bridges	device connection	finish designation	connection	cabeltype	cabelname	BU	GY	VI	page/path
										identification terminal block X57										
								E21	1	1			X7	1						6b. 1
								E22	2	2			X9	1						6c. 1
								E23	1	3			X7	2						6b. 1
								E24	1	4			X9	2						6c. 6
								E25	1	5			X7	3						6b. 2
								E26	2	6			X9	3						6c. 2
								E27	1	7			X7	4						6b. 3
								E28	1	8			X9	4						6c. 6
								E29	1	9			X7	5						6b. 3
								E30	2	10			X9	5						6c. 2
								E31	1	11			X7	6						6b. 4
								E32	1	12			X9	6						6c. 7
								E33	1	13			X7	7						6b. 4
								E34	1	14			X9	7						6c. 3
								E35	1	15			X7	8						6b. 5
								E36	1	16			X9	8						6c. 8
								E37	1	17			X7	9						6b. 6
								E38	1	18			X9	9						6c. 3
								E39	2	19			X7	10						6b. 7
								E40	1	20			X9	10						6c. 8
								E41	1	21			X7	11						6b. 7
								E42	1	22			X9	11						6c. 4
							X	E21	2	23			X7	12						6b. 1
						X		E27	2	24			X7	13						6b. 3
							X	E31	2	25			X7	14						6b. 4
						X		E37	2	26			X7	16						6b. 6
					X			E22	1	27			X9	12						6c. 1
					X			E34	2	28			X9	13						6c. 3
						X		E24	2	29			X9	14						6c. 6
						X		E32	2	30			X9	16						6c. 7
				X				Z7		31			X10	1						6d. 2
													X10	4						
			X					Z8		32			X10	2						6d. 4
													X10	5						
		X						Z9		33			X10	3						6d. 5
													X10	6						
				X				X10	7	34			Z7			X				6d. 2
				X				X10	8	35			Z8				X			6d. 4
								X10	9	36			Z9					X		6d. 6
				X				L101	1	37			X10	10						6e. 4
								M2		38			X10	11						6f. 2
				X				S6		39			X10	12						6h. 3
								Y1												

modific. | date | name | norm | origin | repl. for | repl. by

25. Mai. 2004 | | | | | | |

	drawed	NOS
	checked	18. Okt. 2004

10. Feb. 2004

Typ 7019/148 HD
Power of Chi
USA

X57

UWE GmbH
Buchstrasse 82 · Postfach 2020
D-73510 Schwäbisch Gmünd

drawing-no. A7000/459

ident.-no.: 266596

UWEPLOR4

page 35
68 pages

0 1 2 3 4 5 6 7 8 9

34 36

KLEM_ENG 2 12.12.2003

terminal diagram

identification terminal block: X57

		40	41	42	43	44	45	46	47	48	49
page/path		6e. 4	6e. 4	6e. 4	6j. 1	6j. 2	6j. 2	6j. 1	6g. 4	6g. 4	6h. 4
BU											X
cabelname	cabeltype										
connection				2		14	4		18	18	
finish designation				E101		X10	S5		X10	X9	Y1
device connection											
bridges											
terminal number		40	41	42	43	44	45	46	47	48	49
connection		13	_2	1		3	16			1	15
finish designation		X10	M2	E106 E107		S2	X10			PE4	X7
cabelname	cabeltype										
WX57/PE4	1x									1	
function text											

35 37

0	1	2	3	4	5	6	7	8	9

			date	10. Feb. 2004	Typ 7019/148 HD	X57	uwe GmbH	drawing-no. A7000/459
			drawed	NOS	Power of Chi		Buchstrasse 82 · Postfach 2020	UWEPLOR4
	25. Mai. 2004		checked	18. Okt. 2004	USA		D-73510 Schwäbisch Gmünd	ident.-no.: 266596
modific.	date	name	norm		origin	repl. for	repl. by	page 36 / 68 pages

terminal diagram

identification terminal block: **X58**

Terminals 21–24 each have two sub-positions. Their values are shown as "a / b".

	1	2	3	4	5	6	7	8	9	10	11	12	13	14	15
page/path	6a.1	6a.1	6a.1	6a.2	6a.2	6a.3	6a.3	6a.3	6a.4	6a.4	6a.5	6a.5	6a.6	6a.6	6a.6
VI															
BU															
connection	1	2	3	4	5	6	7	8	9	10	11	12	13	14	15
finish designation	X12	X12	X12	X12	X12	X12	X12	X12	X12	X12	X12	X12	X12	X12	X12
device connection															
bridges															
terminal number	1	2	3	4	5	6	7	8	9	10	11	12	13	14	15
connection	1	1	1	1	1	1	1	1	1	1	1	1	1	1	1
finish designation	E1	E2	E3	E4	E5	E6	E7	E8	E9	E10	E11	E12	E13	E14	E15
RD															
BU															
VI															
BN															
WH															
BK															

	16	17	18	19	20	21	22	23	24	25	26	27	28	29	30	36
page/path	6a.7	6a.8	6a.8	6a.8	6a.9	6a.1	6a.3	6a.5	6a.8	6a.2	6a.9	6e.3	6e.3	6a.4	6a.7	6g.4
VI								x / x	x / x							
BU							/ x									
connection	16	17	18	1	2	2 / 2	2 / 2	2 / 2	2 / 2	11	14	9	2	12	13	18
finish designation	X12	X12	X12	X13	X13	E1 / E4	E7 / E10	E11 / E14	E17 / E20	X13	X13	X13	E100	X13	X13	X13
device connection																
bridges																
terminal number	16	17	18	19	20	21	22	23	24	25	26	27	28	29	30	36
connection	1	1	1	1	1	5 / N	6 / N	7 / N	8 / N	L	L	1	10	L	L	1
finish designation	E16	E17	E18	E19	E20	X13 / C1	X13 / C1a	X13 / C2	X13 / C2a	C1	C2a	L100	X13	C1a	C2	PE2
RD						/ x				x						
BU							/ x						x			
VI									/ x							
BN											x	x				
WH														x		
BK															x	

cabelname / cabeltype

function text

36
38

0 1 2 3 4 5 6 7 8 9

modific.	date	name	norm			
			date	10. Feb. 2004	Typ 7019/148 HD	X58
			drawed	NOS	Power of Chi	
	25. Mai. 2004		checked	18. Okt. 2004	USA	
					origin / repl. for	repl. by

uwe GmbH
Buchstrasse 82 · Postfach 2020
D-73510 Schwäbisch Gmünd

drawing-no. A7000/459
ident.-no.: 266596
UWEPLOR4

terminal diagram

KLEM_ENG 2 12.12.2003

		1	2	3	4
	page/path	6i.3	6i.4	6i.4	6i.4
WX18/X59.1	3x0.75mm²			1	
WX18/X59	3x0.75mm²	1	2		
cabelname	cabeltype				

identification terminal block X59

	1		2		3		4
connection	1	8	2	1	3	2	
finish designation	X18	N1	X18	N1	X18	N1	
device connection							
bridges							
terminal number	1		2		3		4
connection	1		2		3		
finish designation	M7		M7		M7		

cabelname	cabeltype	1	2	3	4
WX59/M7	3x0.75mm²	1	2		
WX59/M7.1	3x0.75mm²			1	

function text

0 1 2 3 4 5 6 7 8 9

			date	10.Feb.2004	Typ 7019/148 HD
			drawed	NOS	Power of Chi
	25.Mai.2004		checked	18.Okt.2004	USA
modific.	date	name	norm		origin

repl. for

X59

repl. by

uwe GmbH
Buchstrasse 82 · Postfach 2020
D-73510 Schwäbisch Gmünd

drawing-no. A7000/459

ident.-no.: 266596

UWEPLOR4

KLEM_ENG 2 12.12.2003

terminal diagram

identification terminal block

X55a

	page/path	6f.4	6f.4	6f.4
cabelname	cabeltype			
	connection	6		
	finish designation	X55	C17	M8 C17
	device connection			
	bridges			
	terminal number	1	2	3
	connection			7
	finish designation	M8	M8	X55
cabelname	cabeltype			
	function text			

modific.	date	name	norm		origin	repl. for	repl. by		
	25.Mai.2004		date: 10.Feb.2004; drawed: NOS; checked: 18.Okt.2004		Typ 7019/148 HD Power of Chi USA		X55a	uwe GmbH Buchstrasse 82 · Postfach 2020 D-73510 Schwäbisch Gmünd	drawing-no. A7000/459 ident.-no.: 266596 UWEPLOR4 page 39 68 pages

KLEM_ENG 2 12.12.2003

terminal diagram

identification terminal block **A4-X60**

	1	2	3	4	5	6	7	8	9	10	PE
page/path	61.3	61.3	61.4	61.4	61.4	61.5	61.5	61.5	61.6	61.6	61.1
connection	1	2	3	4	5	6				7	3
finish designation	X20	X20	X20	X20	X20	X20				X20	X19
device connection											
bridges		● 2–4	● 3–5	●	●		● 7–10	●	●	●	
terminal number	1	2	3	4	5	6	7	8	9	10	PE
connection											
finish designation	A4	A4-Y2				A4-M10	A4-M10	A4-Y2	A4		A4

cabelname	cabeltype	1	2	3	4	5	6	7	8	9	10	PE
WA4-X60/A4-M10	1x							1				
WA4-X60/A4-Y2	1x								1			
WA4-X60/A4	1x									1		

function text

39

0	1	2	3	4	5	6	7	8	9