Cod.man.: 11284.023.5.0

Cod.app.:10297.007.4.0 (230V 3~ 60Hz)
Cod.app.:10299.011.4.0 (230V ~ 60Hz)

CE

USA

KOMBI 1000

TECHNICAL MANUAL

INSTALLATION AND MAINTENANCE

SPORTARREDO® S.p.A.

30020 GRUARO-ITALY
VIA DELL'INDUSTRIA 7
Tel. 0421/767676 Fax 0421/767670

09/09/02

INDEX OF SECTIONS

1 - GENERAL INFORMATION

1.1 INTRODUCTION. ..... Page 2

2 - TECHNICAL DATA

2.1 EXTERNAL DIMENSIONS AND TABLE OF TECHNICAL DATA KOMBI 1000 3

3 - INSTALLATION INSTRUCTIONS

3.1 PRE-INSTALLATION. 4
3.2 CONNECTION 4
3.3 ASSEMBLY INSTRUCTIONS 5

4 -INSTRUCTIONS FOR MAINTENANCE

4.1 CONTROL BOARD 8
4.2 MPT/3-PROGRAMMING USING THE KEYBOARD 9
4.3 PERIODIC CONTROL PROCEDURES 13
4.4 DEMOLITION OF THE MACHINE 13
4.5 WASTE MATERIALS 13
4.6 MAINTENANCE 15
4.7 KOMBI 1000 SPARE PARTS LIST 20
4.8 TROUBLESHOOTING AND RAPID DIAGNOSTICS 21

5 - CIRCUIT DIAGRAMS

5.1 CIRCUIT DIAGRAMS LEGEND. 22

1.1 INTRODUCTION

IMPORTANT

BEFORE OPERATING THE MACHINE, READ THE TECHNICAL INSTRUCTIONS CONTAINED IN THIS OPERATING MANUAL CAREFULLY AND COMPLETELY.

This Operating Manual is designed for use by installers and operators, and should be read carefully and completely before the machine is operated. The manual should always be available for reference and should be kept in a safe place so that it stays in good condition for future reference. For further copies or updates of the manual, contact the manufacturer at the address on the front page.
Sportarredo SpA reserves the right to make changes to the product and to the manual without being obliged to update the preceding manuals.
This manual contains all the instructions and information necessary to operate the machine:

- Correct installation of the machine.
- Description of the functions of the machine.
- Circuit diagrams.

The installers and the operators can use this manual to understand the characteristics of the machine and to learn the correct operating procedure.

THE UNIT IS SUPPLIED FOR INPUT VOLTAGE AT 230V ~ 60 Hz AND IT IS SUPPLIED WITH OUT THE FEEDING CABLE

To make a **power cable connection**, make reference at chapter "INSTALLATION INSTRUCTIONS " paragraph "ASSEMBLY INSTRUCTIONS" table 2.

THE **BREAKER** MUST BE INSTALLED IN THE POWER SUPPLY BOARD OF THE ESTHETICAL CENTRE AND IT MUST BE DONE BY THE CENTRE ITSELF.

Mod. KOMBI 1000 : 2x63A-30mA to feed 230V ~ 60 Hz
3x32A-30mA to feed 230V 3~ 60 Hz
4x25A-30mA to feed 400V 3~ 60 Hz

These operation must be done by technical personnel.

THE POWER SUPPLY CONNECTION (UNIT- BOARD) MUST BE DONE BY THE CENTRE. THE SKILLED TECHNICIAN MUST USE A CERTIFIED CABLE WITH THE PROPER SECTION AND WITH ADEQUATE MECHANICAL PROTECTION, IN ACCORDANCE WITH THE RULES IN FORCE.

SEE CAHAPTER 2.2 TABLES FOR TECHNICAL DATA "POWER SUPPLY CABLE SECTION"

TO HAVE A CORRECT USE OF THE EQUIPMENT, THE ROOM TEMPERATURE **MUST NOT EXCEED THE 33°C DEGREES.** IF ROOM TEMPERATURE EXCEEDS THIS VALUE, WE SUGGEST TO UTILIZE AN AIR-CONDITIONING UNIT.

2 - TECHNICAL DATA

USA

2.1 EXTERNAL DIMENSIONS AND TABLES OF TECHNICAL DATA KOMBI 1000

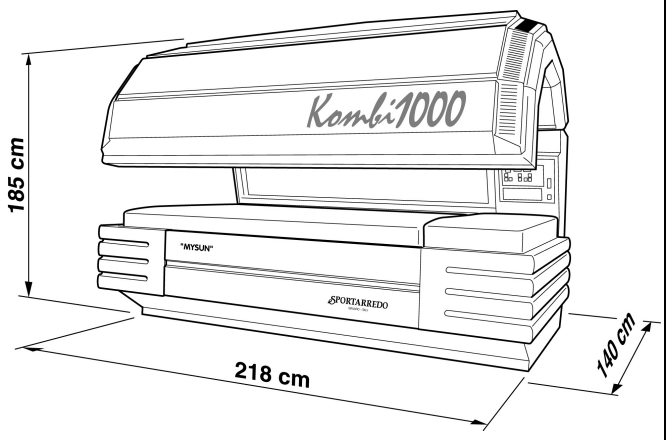

EXTERNAL DIMENSIONS

KOMBI 1000

MAXIMUM LENGTH	218 cm
MAXIMUM WIDTH	140 cm
MAXIMUM HEIGHT	185 cm
WEIGHT	589 Kg

KOMBI 1000	U.M	DATA
POWER SUPPLY	V	230V (230V 3~) (400V 3N)
POWER ABSORPTION	Kw	10.5 (11) (11)
CURRENT ABSORPTION	A	47 (32) (18.5)
POWER FACTOR CORRECTION		0.97 (0.99) (0.99)
FREQUENCY	Hz	60
SECTION OF POWER CABLE	mm²	16 (6) (4)
EXHAUST AIR FLOW	m³/h	1200
CALORIES EXPELLED	Kcal/h	9028
HEAT DISSIPATION	Kcal/h	5420
CEILING LAMPS	N°	20 KALFASUN B23-White 160W
	N°	5 KALFASUN 630F
	N°	1 KALFASUN 1530F
LATERAL LAMPS	N°	5 KALFASUN 630F

IMPORTANT

IN CASE OF FAILURES THAT CAN CAUSE A SHORT CIRCUIT, THE EQUIPMENT, FED WITH SINGLE-PHASE TENSION, CAN BE SUBMITTED TO DAMAGES REQUIRING ALSO A RELEVANT REPAIRING INTERVENTION, THAT CAN REACH THE NEW CABLE OF ONE OR MORE ELEMENTS OF THE EQUIPMENT.

THE SAFETY OF THE PERSON, EVEN IN CASE OF SHORT CIRCUIT, IS NOT COMPROMISED.

3.1 PRE-INSTALLATION

In order to ensure correct operation of the machine, it should be installed in an area which has been prepared as shown in the figure.

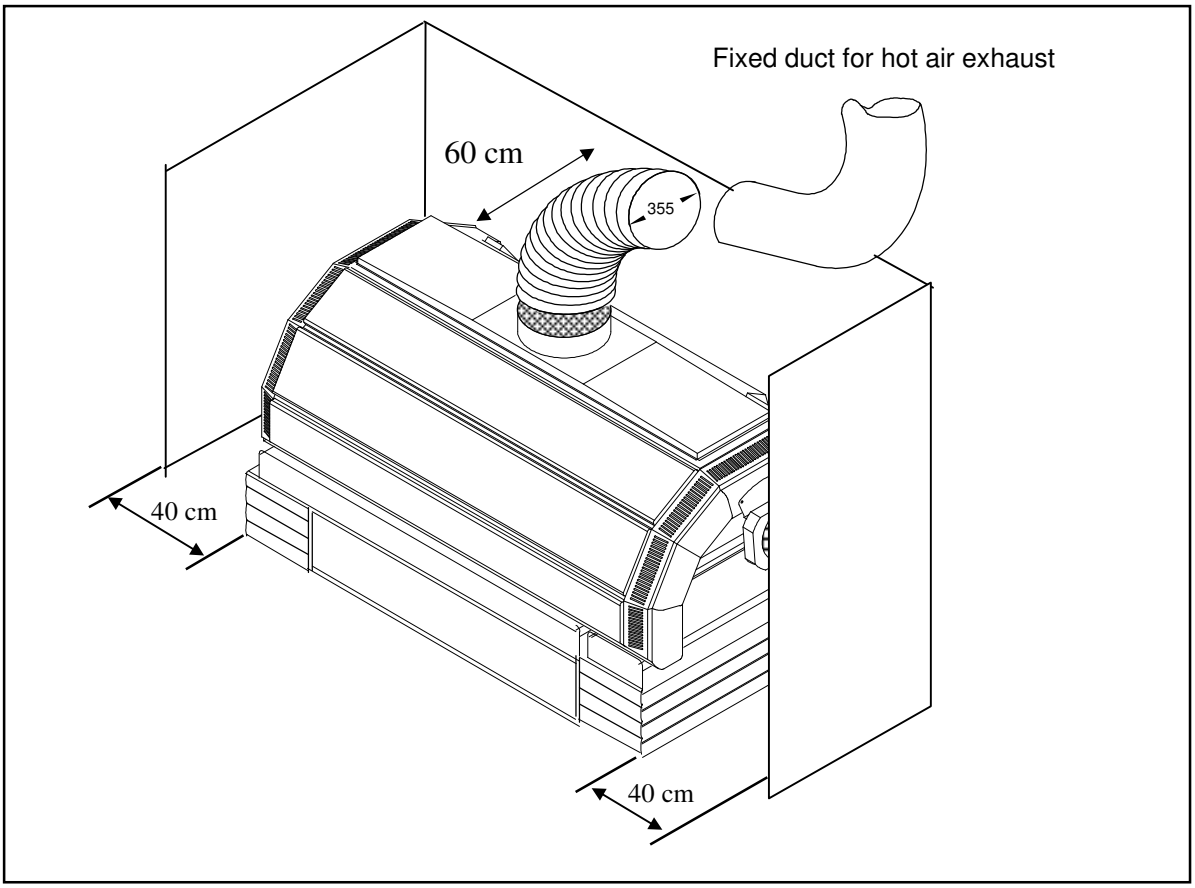

3.2 CONNECTION

- The area in which the machine is installed **must be adequately ventilated**. A fixed exhaust duct must be installed to expel the hot air from the cooling system to the exterior.
- The metal structure of the machine is earthed by means of insulated wires connected to the earth terminal in the electrical junction box.
- The earth circuit must be in full compliance with **IEC standard 64-8, section IX.**
- The earth connection must also be fitted to low-voltage systems situated in wet or very damp areas (if the voltage to earth is in excess of 25V for alternating current or 50V for direct current).
- The earth wires connected to every part of the various sections of the machine and the earth wires from the various power circuits and user groups must be connected to a single earthing circuit.
- Ensure that the materials used for the earth system are suitably robust and provided with adequate protection.
- The connection to the main earth terminal should be as short as possible. The earth wires should not be subjected to mechanical stress of any kind, and must be protected against corrosion.

3.3 ASSEMBLY INSTRUCTIONS

SEE ENCLOSED TABLE 1

1 - Position the base **A** on the floor.

2 - Fit the lateral section **B** to the base and bolt in position using the 4 hexagonal-head bolts provided **C**.

3 - Referring to the figure, install the control cassette **D**, the head unit power supply cassette **W** and the lateral cassette **E**, inside the base.

4 - Position the massage frame **F** and the cushion **G**.

5 - Fit the connectors:

- 24-pin connector between power supply cassette and upper section
- 16-pin connector between control cassette and upper section
- 16-pin connector between control cassette and control panel
- 10-pin connector between control cassette and lateral cassette
- 16-pin connector between lateral cassette and lateral section
- 06-pin connector between control cassette and the power supply cassette
- 03-pin connector between control cassette and the massage unit.

6 - Connect the power supply cable to the connector inside the control cassette

7 Insert the two brackets which support the upper section **H** into the pushing in the lateral section. Ensure that the two limit-position bolt **I** face upwards as shown in the TABLE 1

8 Slide the upper section **L** onto the support brackets as far as allowed by the two limit-position bolts. Fix the upper section to the brackets using the two 4.8 x 38 self-tapping screws provided **M**.

9 When assembly of the unit is complete, connect the negative pole of the battery-accumulator inside the control cassette for automatic raising of the upper section.

10 - Position the mattress.

11 - How to use the overload cut-out switch (located on the control cassette).

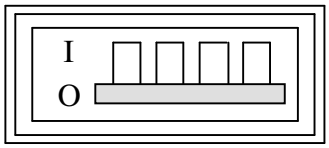

I = Power supply connected.

0 =Power supply disconnected (like in the figure above).

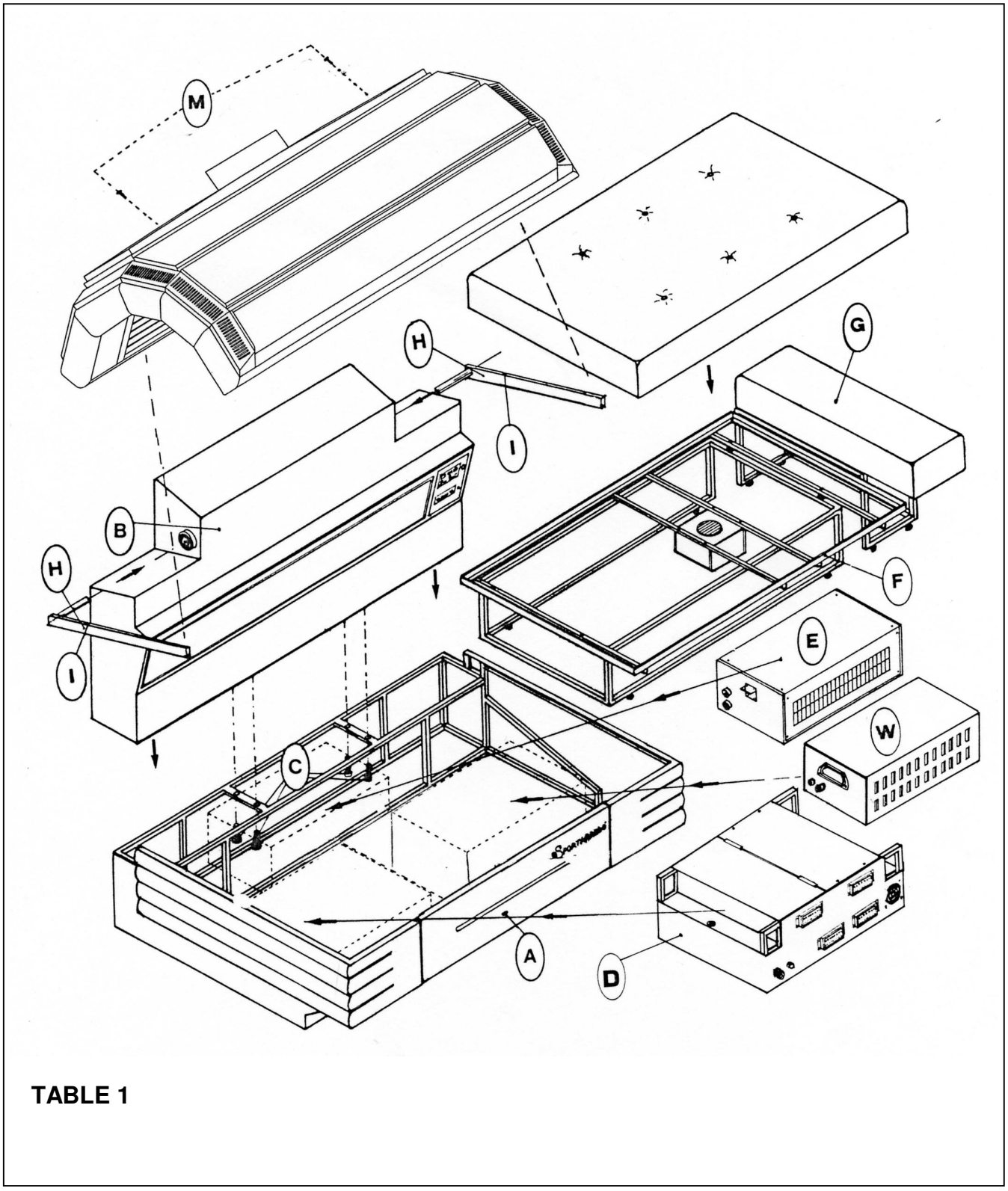

TABLE 1

POWER CABLE CONNECTION TO FEED **230V ~ 60 Hz**

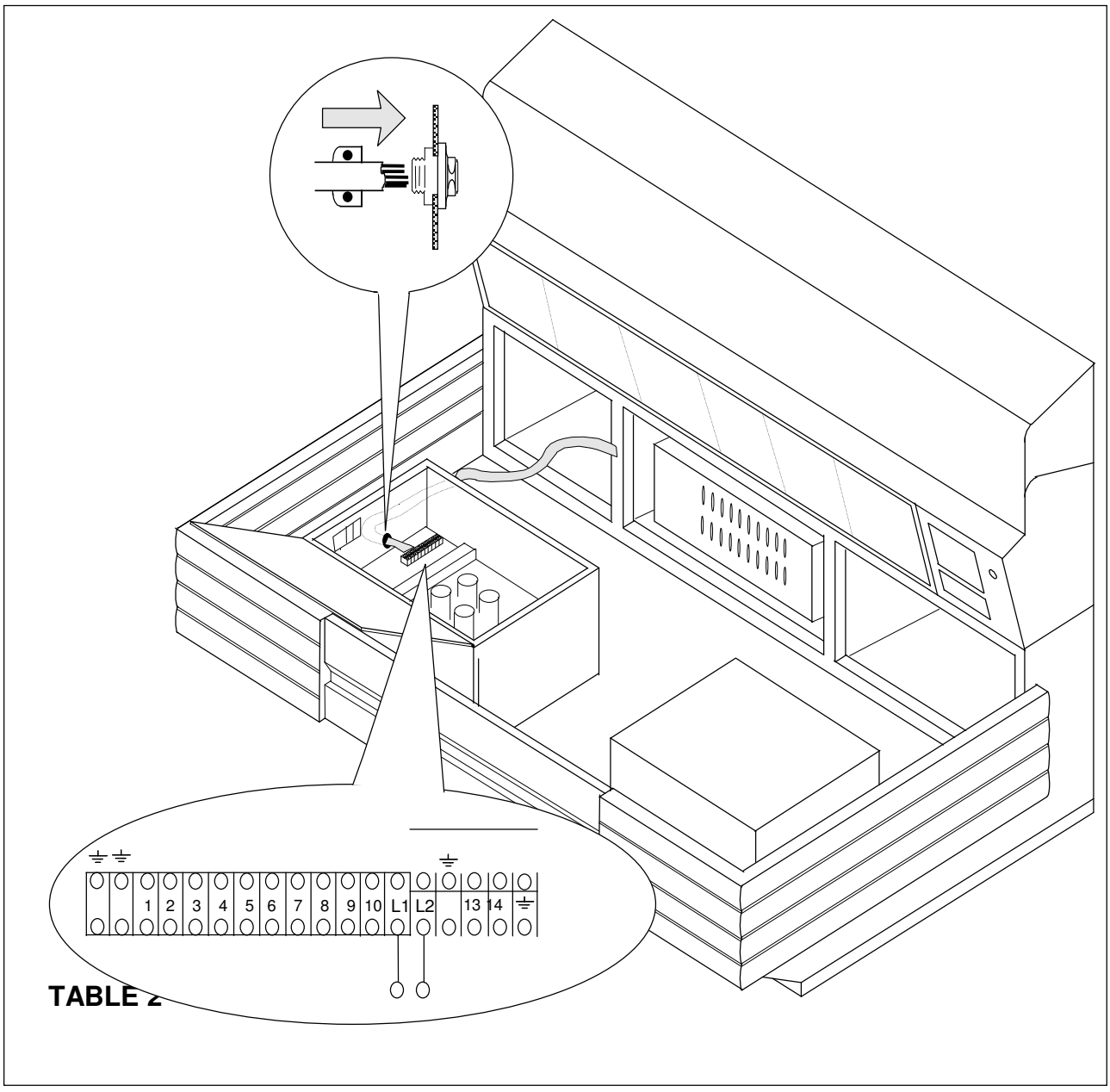

TABLE 2

4.1 CONTROL BOARD

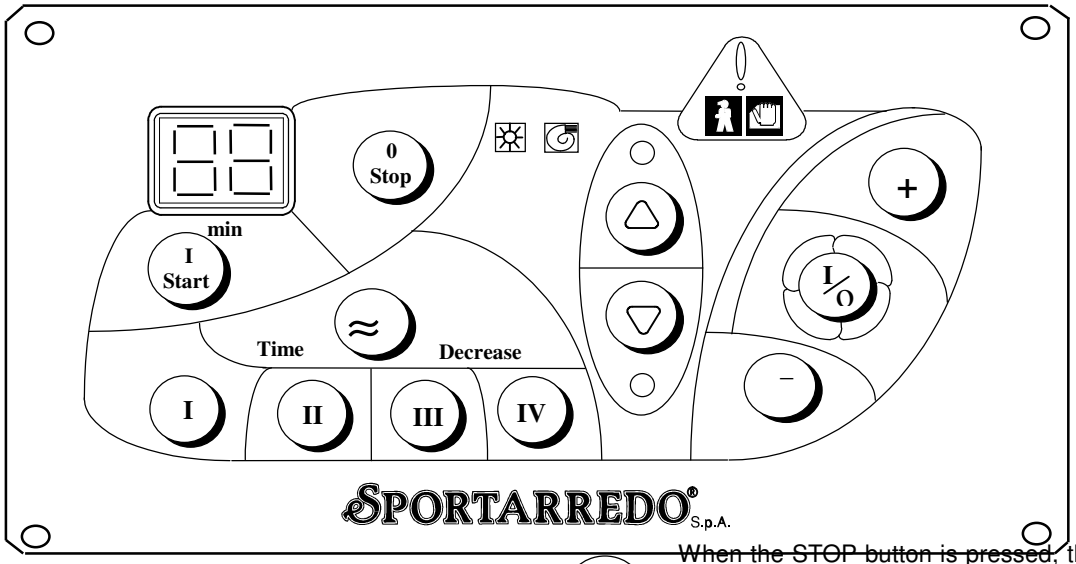

I Start Pushing this button you start the tanning treatment.

0 Stop When the STOP button is pressed, the tanning lamps are switched off and the upper section (ceiling) moves upwards. The tanning session is concluded.

≈ The time button is used to decrease the duration of the treatment after the unit has been turned on. At each pressure of the button there's a decrease of 1 minute.

I/O Pushing the ON/OFF button you start or stop the body cooling fan.

+ The buttons marked **"+"** may be used to increase the power of the fan.

– The buttons marked **"-"** may be used to decrease the power of the fan.

▽ When this button is pressed, the upper section descends to the normal operating position. Downward movement of the head is controlled by impulses; if the button is released, the downward movement is interrupted.

△ Press this button to adjust the height of the head as desired. Upward movement of the ceiling is controlled by impulses; if the button is released , the upward movement is interrupted.

This lamp lights when the appliance has been operated for 100 hours to indicate that routine maintenance must be performed.

This lamp lights when the appliance has been operated for 400 hours to indicate that it is necessary to call a qualified technician for special maintenance.

I **II** **III** **IV** Pushing this buttons you enter the programme following the customer skin type and how long does it need to tan.

BODY MASSAGE

Body massage ignition.
This function is working only during the tanning session.

Adjustment of the speed of the body massage

IMPORTANT

MPT/3 electronic board permits to use the remaining time of a session in case of temporary interruption of power, with the relative "reset" of the unit. The remaining time will flash in the display: pushing the **Start** button you can use such time, while pushing the **Stop** button you set to zero such time and the unit is ready for a new session.

The machine is equipped with a radio/cassette-player, so that the client can listen to music during the tanning session. The use of headphones is recommended.

4.2 MPT/3 PROGRAMMING USING THE KEYBOARD

Function	Code	Value
Coin time	PU	1-40
Sitting time for skin type 4	P4	1-40
Sitting time for skin type 3	P3	1-P4
Sitting time for skin type 2	P2	1-P3
Sitting time for skin type 1	P1	1-P2
Board total operating hours reading	OF	XX-XX
Number of sittings performed reading	nS	XX-XX
Board manufacture date reading	dC	WW-YY

To be able to read or modify the MPT/3 board base parameters, the board must be programmed using the following procedure:
1) Turn on power to the device, then press the **Time** key, followed by the **II** key, and keep them pressed for approximately 4 seconds.
"PU" will appear on the display, indicating that the first parameter regarding the coin sitting time can now be accessed and changed as follows:

- Press the start key and the machine will display the currently-loaded value;
- Use the + or – key to increase or decrease the value;
- Press the stop key to confirm the change and exit from the program;
- Return the machine to normal operating mode by cutting off power for a few seconds.

Use the + or – keys to select the program to be modified or displayed.

PU - COIN TIME
When "PU" is displayed, the coin sitting time program may be accessed. Press the start key to display the currently-entered value, and then the + or – key to make the desired changes. Press stop to confirm the change and exit from the program. Once exited, the display will read "P4".
P4 - SITTING TIME FOR SKIN TYPE 4 (Dark olive complexions)
Follow the procedure outlined above for the PU program. Once exited, the display will read "P3".
P3 - SITTING TIME FOR SKIN TYPE 3 (Medium complexions)
Follow the procedure outlined above for the P4 program.
Once exited, the display will read "P2".
P2 - SITTING TIME FOR SKIN TYPE 2 (Light complexions)
Follow the procedure outlined above for the P4 program.
Once exited, the display will read "P1".
P1 - SITTING TIME FOR SKIN TYPE 1 (Very light complexions)
Follow the procedure outlined above for the P4 program.
Once exited, the display will read "OF".
OF - BOARD TOTAL OPERATING HOURS READING
When "OF" appears on the display, press the start key to display the total number of board operating hours. For example, 1234 hours will be divided into two parts (12 and 34); use the time key to move between the two groups of numbers. The maximum value that can be entered is 8999. Press the stop key to exit the OF program. Once exited, the display will read "nS".
nS - NUMBER OF SITTINGS PERFORMED READING
When "nS" appears on the display, press the start key to display the number of sittings. To read this number, repeat the procedure given above for the OF program. Push the stop key to exit the nS program. Once exited, the display will read "dC".
dC - BOARD MANUFACTURE DATE READING
When "dC" appears on the display, press the start key to display the week number and, after having pressed the time key, the last two numbers of the year in which the board was manufactured. Push the stop key to exit the dC program. Once exited, the display will read "PU".
At this point, programming has been completed. To return the machine to normal operational status, turn the electrical power off and then back on.

PARAMETER PROGRAMMING

Function	Code	Value
Final ventilation time	A0	1-5
Function reserved	A1	00
Sitting start delay	A2	0-40
Up / down buttons activated/deactivated	A3	Ab-dS
Coin accumulation function activated/deactivated	A4	Ab-dS
START stand-by function activated/deactivated	A5	Ab-dS
START button on keyboard activated/deactivated	A6	Ab-dS
Mid session buzzer activated/deactivated	A7	Ab-dS
Display time	A8	Ab-dS
Time remaining storage	A9	Ab-dS
Center code number setting (StartEst+StopEst)	E0	00-99
Set code number of the sub centre	E1	0-99
Card functioning mode	E2	0-3
Serial number set for RS485	E6	00-99
Parameter copy from a second RS485 board (copy with Time key)	CP	-
Test function: 14' cycle, 4' cooling, 2' pause x three times (start/stop)	FC	-
Number of point/minute face only	C1	00-99
Number of point/minute face only	C2	00-99
Number of point/minute body session	C3	00-99
Number of point/ minute body session	C4	00-99

To enter the second programming phase, proceed as follows:
Once the first programming phase has been completed, "PU" will appear on the display. Press, in this order, the **Time** key, the **IV** key and the **I** key and hold them down for approx. 4 seconds. "AD" will appear on the display indicating that the second level of functions can now been accessed.

- Press the start key and the machine will display the currently-loaded value;
- Use the + or – key to increase or decrease the value;
- Press the stop key to confirm the change and exit from the program.

A0 - FINAL VENTILATION TIME

When A0 appears on the display, it is possible to enter the program for modifying final ventilation time. Press the start key to display the currently-loaded value and use the + or – key to make changes. Press stop to confirm the change and exit the program. Once exited, "A1" will appear on the display.

A1 - FUNCTION RESERVED

When A1 appears on the display, it is possible to enter the program reserved for future applications. The entered value is irrelevant. Press stop to confirm the change and exit the program. Once exited, "A2" will appear on the display.

A2 - SITTING START DELAY

When A2 appears on the display, it is possible to enter the program for modifying the delay time at the beginning of a sitting, with an external start control. Repeat the procedure given above under program A1. Once the program has been exited, "A3" will appear on the display.

A3 - UP DOWN BUTTONS ACTIVATED/DEACTIVATED

Enter program A3 by pressing the start button. "Ab" (up/down activated) or "dS" (up/down deactivated) will appear on the display. Change the setting using the + or – key. Press stop to confirm the change and exit the program. Once exited, "A4" will appear on the display.

A4 - COIN ACCUMULATION FUNCTION

Enter program A4 by pressing the start button. "Ab" (accumulation activated) or "dS" (accumulation deactivated) will appear on the display. Change the setting using the + or – key. Press stop to confirm the change and exit the program. Once exited, "A5" will appear on the display.

A5 - START STAND-BY FUNCTION (with coin accumulation activated)
Enter program A5 by pressing the start button. “Ab” (stand-by activated) or “dS” (stand-by deactivated) will appear on the display. Change Ab or dS status using the + or – key. Press stop to confirm the change and exit the program. Once exited, “A6” will appear on the display.

A6 - START BUTTON ON KEYBOARD
Enter program A6 by pressing the start button. “Ab” (key activated) or “dS” (key deactivated) will appear on the display. Change Ab or dS status using the + or – key. Press stop to confirm the change and exit the program. Once exited, “A7” will appear on the display.

A7 - MID SESSION BUZZER ACTIVATED/DEACTIVATED
Enter program A7 by pressing the start button. “Ab” (buzzer activated) or “dS” (buzzer deactivated) will appear on the display. Change Ab or dS status using the + or – key. Press stop to confirm the change and exit the program. Once exited, “A8” will appear on the display.

A8 - DISPLAY TIME
Enter program A8 by pressing the start button. “Ab” (display activated) or “dS” (display deactivated) will appear on the display. Change Ab or dS status using the + or – key. Press stop to confirm the change and exit the program. Once exited, “A9” will appear on the display.

A9 - TIME REMAINING STORAGE
Enter program A9 by pressing the start button. “Ab” (storage activated) or “dS” (storage deactivated) will appear on the display. Change Ab or dS status using the + or – key. Press stop to confirm the change and exit the program. Once exited, “E0” will appear on the display.

E0 - CENTER CODE NUMBER SETTING
When E0 appears on the display, it is possible to enter the program to set the code number of the tanning center for that board. Press the external start stop keys and, using the + and – keys, enter the number of the center. Press stop to confirm the change and exit the program. Once exited, “E1” will appear on the display.

E1-SET CODE NUMBER OF THE SUB-CENTRE.
For MPT/3-TRS/2 versions precedent to the 6.00 version: E1 indicates the cost in points that the card debits when it is set in card mode, from a minimum of one point to a maximum of 99. With the 6.00 and later version, the E1 parameter has changed meaning and has become the number of the franchising agency. The card reads the number of the franchising agency from the card and memorizes the value in the E1 parameter. At this point, with the SUN MANAGER software, that value can be read and the cost debited to the agency that issued the chip card.
In the versions successive to 6.00, the E1 parameter (cost in points) has been substituted by the parameters C1-C2-C3-C4.

E2 - CARD FUNCTIONING MODE
When E2 appears on the display, it is possible to enter the program to select the operation mode of the card reader installed on the machine. Press the start key to confirm the already-loaded value, or use the + and – keys to make changes. Press stop to confirm the change and exit the program. Once exited, “E3” will appear on the display.
“Zero” mode indicates that the reader has not been activated.

E6 - SERIAL NUMBER SET FOR RS485
When E6 appears on the display, it is possible to enter the program to set the board i.d. serial number for connection to a computer. Press start to enter the program and use the + and – keys to make changes. Press stop to confirm the change and exit the program. Once exited, “CP” will appear on the display.

CP - PARAMETER COPY FROM A SECOND RS485 BOARD
With the display showing CP you access the programme that allows the copying of set parameters from one card to another. The cards must be connected through the serial connection (terminals 20 and 21). Press Start and gain access to the programme: Press the Time key for 4 seconds in order to carry out the copying of the parameters. Press Stop to exit from the programme. On exiting the display shows FC.

FC - TEST FUNCTION

When FC appears on the display, it is possible to enter the program that allows the board to perform three complete self-test routines. Push start to enter the program and the board automatically carries out a cycle of three self-test routines made up of three 14-minute operating cycles, each with its respective 4-minute cool-down period and 2-minute pause.

C1-NUMBER OF POINTS / MINUTE FACE ONLY.

With the display showing C1 you access the programme that allows the insertion of the number of points that are deducted at every face session, or for every token in those cases in which the card is programmed on card 2 mode, whenever the card is used with a matched chip card reader. Example: if we wish to enter 4000 points for the face session we must set up the card with C1=40, C2=00. Press the Start key to accept the parameters already memorized, or else the keys + or - to carry out the variation. Press the Stop key to confirm the variation and exit from the programme. On exiting the display will show C2.

C2-NUMBER OF POINTS / MINUTE FACE ONLY.

With the display showing C2 you access the programme that allows the insertion of the number of points that are deducted at every face session, or for every token in those cases in which the card is programmed on card 2 mode, whenever the card is used with a matched chip card reader. Example: if we wish to enter 4000 points for the face session we must set up the card with C1=40, C2=00. Press the Start key to accept the parameters already memorized, or else the keys + or - to carry out the variation. Press the Stop key to confirm the variation and exit from the programme. On exiting the display will show C3.

C3-NUMBER OF POINTS / MINUTE BODY SESSION.

With the display showing C3 you access the programme that allows the insertion of the number of points that are deducted at every body session, or for every token in those cases in which the card is programmed on card 2 mode, whenever the card is used with a matched chip card reader. Example: if we wish to enter 4000 points for the body session we must set up the card with C3=40, C4=00. Press the Start key to accept the parameters already memorized, or else the keys + or - to carry out the variation. Press the Stop key to confirm the variation and exit from the programme. On exiting the display will show C4.

C4-NUMBER OF POINTS / MINUTE BODY SESSION.

With the display showing C4 you access the programme that allows the insertion of the number of points that are deducted at every body session, or for every token in those cases in which the card is programmed on card 2 mode, whenever the card is used with a matched chip card reader. Example: if we wish to enter 4000 points for the body session we must set up the card with C3=40, C4=00. Press the Start key to accept the parameters already memorized, or else the keys + or - to carry out the variation. Press the Stop key to confirm the variation and exit from the programme. On exiting the display will show A0.

At this point, programming has been completed. To return the machine to normal operational status, turn the electrical power off and then back on.

MPT/3 CIRCUIT BOARD TERMINALS: NUMBERING AND DESCRIPTION

1 = POWER SUPPLY PHASE.
2 = POWER SUPPLY NEUTRAL.
3 = CONTROL PHASE FOR FIRST LAMP SWITCH-ON.
4 = CONTROL PHASE FOR SECOND LAMP SWITCH-ON.
5 = CONTROL PHASE FOR LAMP COOLING FANS.
6 = CONTROL PHASE FOR ADJUSTABLE BODY-COOLING VENTILATION.
7 = COMMON CONTACT FOR ASCENT.
8 = NC CONTACT FOR ASCENT.
9 = NA CONTACT FOR ASCENT.
10 = COMMON CONTACT FOR DESCENT.
11 = NC CONTACT FOR DESCENT.
12 = NA CONTACT FOR DESCENT.
13 =COMMON
14 =ENABLE START
15 = START.
16 = STOP
17 = COMMON.
18 = SELECTOR 1
19 = SELECTOR 2
20 = SERIAL +
21 = SERIAL -

4.3 PERIODIC CONTROL PROCEDURES

Check that the electrical safety devices, and the acoustic/illuminated signal devices and alarms are undamaged and that they function correctly. Check that the equipment and devices in the electrical control box are in satisfactory condition.

These checks must be performed by qualified personnel

4.4 DEMOLITION OF THE MACHINE

Each country applies specific legislation concerning the disposal of machinery. Disposal of this machine must be carried out in compliance with the regulations laid down by local legislation and bye-laws. Dismantle the machine and group the various parts according to their chemical characteristics.

Dismantling of the machine must be performed by qualified personnel

4.5 WASTE MATERIALS

The lamps are considered as disposable waste materials and all the materials regarding the packing. Due to their characteristics, these lamps are classified as non-toxic and non-harmful **special waste materials**. Disposal of the lamps must therefore be effected as required by the appropriate legislation.

DEFINITION OF SPECIAL WASTE MATERIAL: Residual material deriving from industrial processes or agricultural, artisan, commercial or service activities which, in view of their quantity of characteristics, are not classified as normal household refuse.

IMPORTANT !
ALWAYS DISCONNECT THE MACHINE FROM THE POWER SUPPLY BY PRESSING THE SWITCH MAGNETOTHERMIC DIFFERENTIAL BEFORE CARRYING OUT MAINTENANCE

4.6 MAINTENANCE

PILOT LAMP FOR ROUTINE MAINTENANCE

This lamp lights when the appliance has been operated for 100 hours this means that routine maintenance, consisting of cleaning of internal and external filters of the appliance, should be carried out.
The luminous signal is turned off by the following procedure:
- press key **I**,
- holding down key **I**, press key **II**,
- holding down keys **I** and **II**, press key **III**,
- hold down keys **I**, **II** and **III**.

Now the resetting procedure begins and is shown by the fast flashing of the pilot lamp. When the flashing stops the session time appears and the resetting procedure has finished.
This procedure should be carried out with the appliance in pause mode.

PILOT LAMP FOR SPECIAL MAINTENANCE

This lamp lights when the appliance has been operated for 400 hours this means that the following extraordinary maintenance operations should be carried out:
cleaning of the internal and external filters
- replacement of the lamps.
- Grease the screw on the latch mechanism. Use MOLIKOTE BR2, only. This lubrificant is aviable from SPORTARREDO spa
- Check that the timer devices, are undamaged and that his function correctly.
- Check that the warning for SAFETY AND ACCIDENT PREVENTION is readable and in satisfactory condition.
- Every 800 working hours replace the reflectors, the UV filters and the starters for the low-pressure lamps. Clean the fans and the inside of the machine.
- Every 1000 working hours replace the acrylics.

The signal light is taken off as follows:
-push button **I**,
-Keeping pushed button **I**, push button **II**,
-Keeping pushed button **I**, **II**, push button **+** ,
-Keeping pushed button **I**, **II**, **+** , push button –,
-Keeping pushed button **I**, **II**, **+** ,**- .**
Now the resetting procedure begins and is shown by the fast flashing of the pilot lamp. When the flashing stops the session time appears and the resetting procedure has finished.
This procedure should be carried out with the appliance in pause mode.

REMOVING AND CLEANING THE ACRYLIC PANELS FITTED TO THE CEILING
We recommend to use household liquid detergents containing ammonia (i.e. detergents for cleaning glass).

N.B. DO NOT USE ALCOHOL OR ALCOHOL-BASED PRODUCTS FOR CLEANING

CLEANING THE HIGH PRESSURE LAMPS FILTERS
Clean the filters internally and externally using a 50% solution of water and denatured alcohol.

Any tampering with the appliance or the use of non-original material or parts may lead to injury. In such cases, the manufacturer declines all civil and penal liability, and the warranty shall automatically be considered null and void.

MAINTENANCE OF THE COMPONENTS IN THE ELECTRICAL BOXES

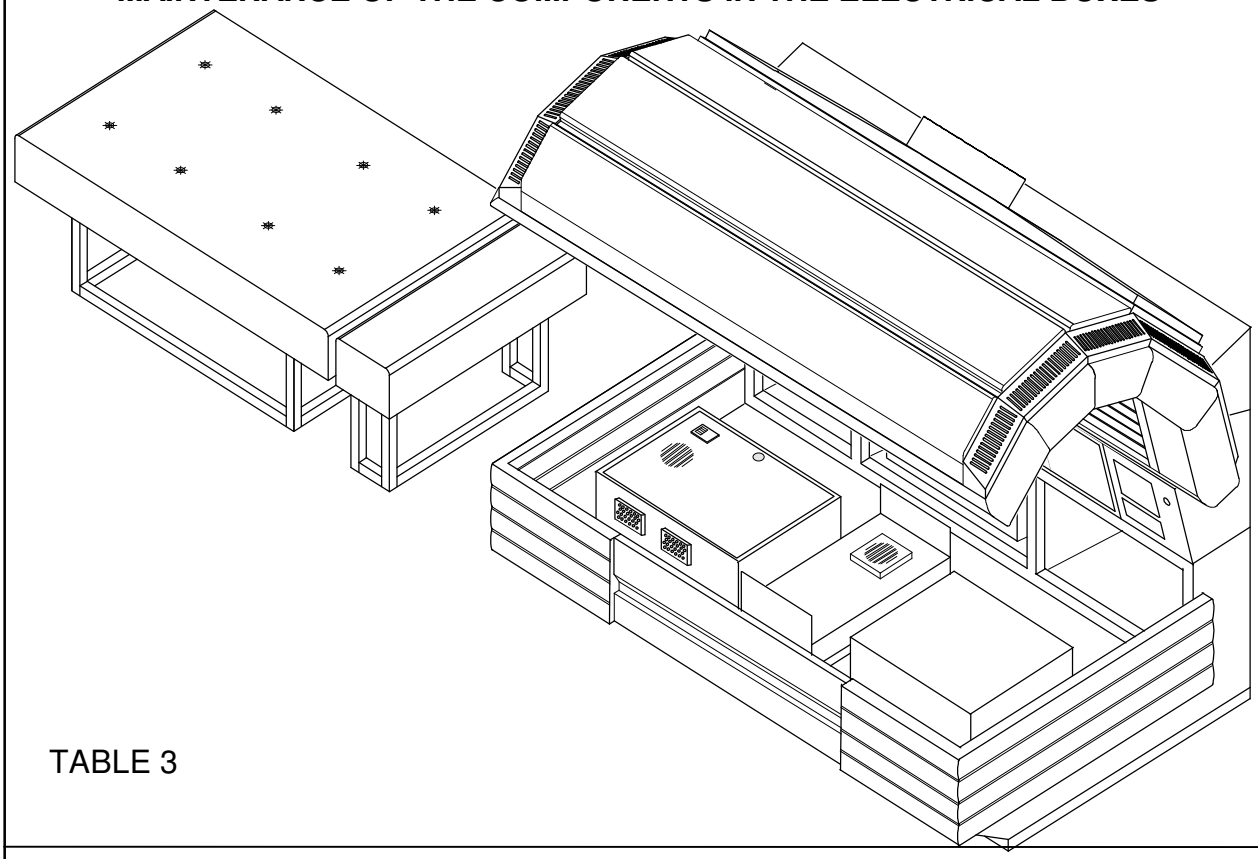

TABLE 3

REMOTE CONTROL T.MAX

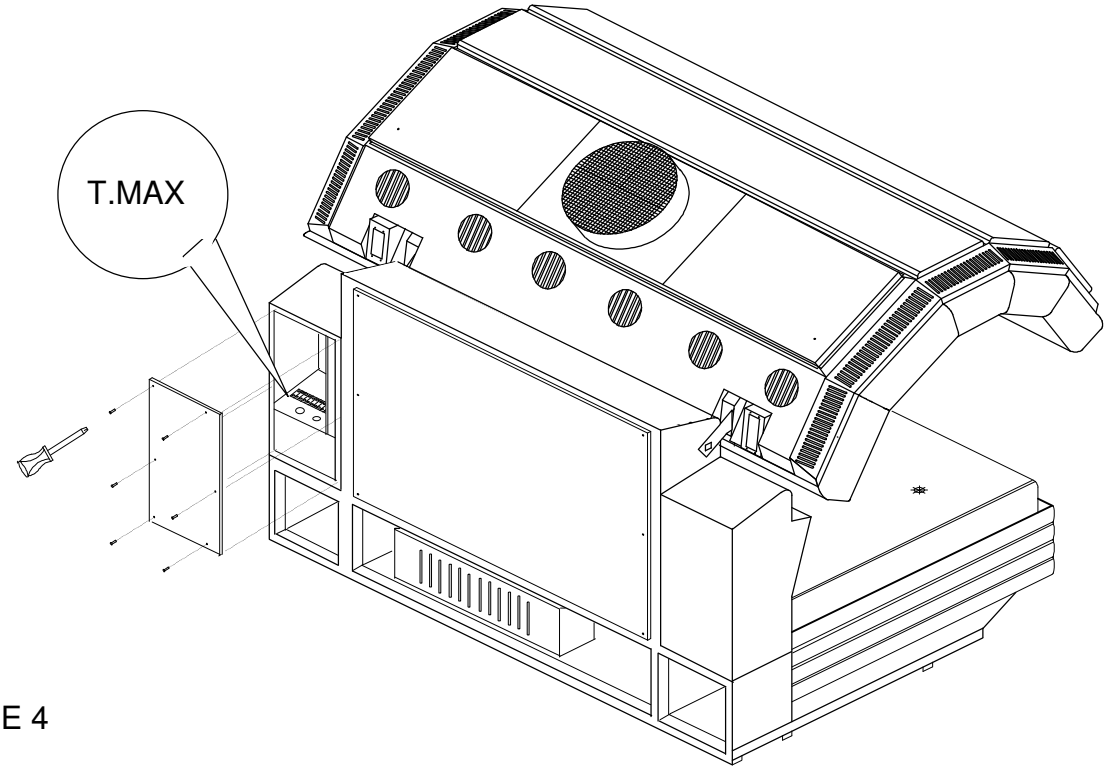

TABLE 4

REMOVING AND CLEANING THE ACRYLIC PANELS, REPLACEMENT OF THE LOW PRESSURE LAMPS

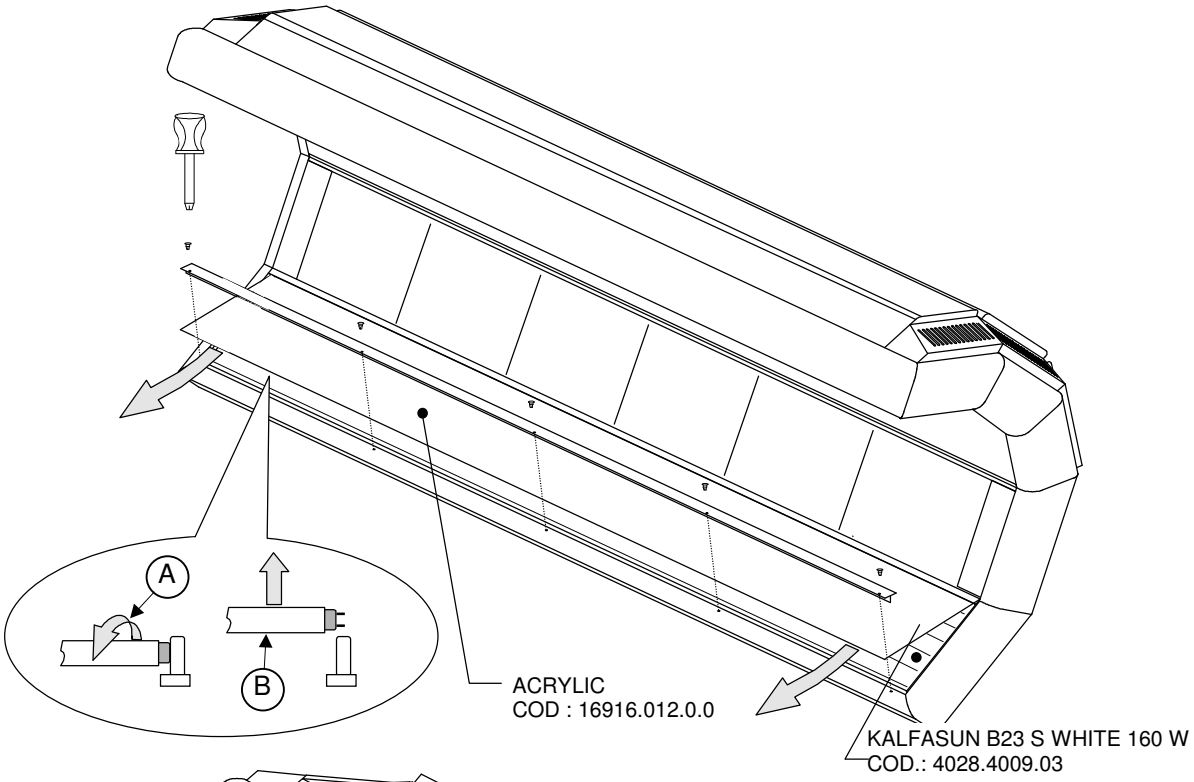

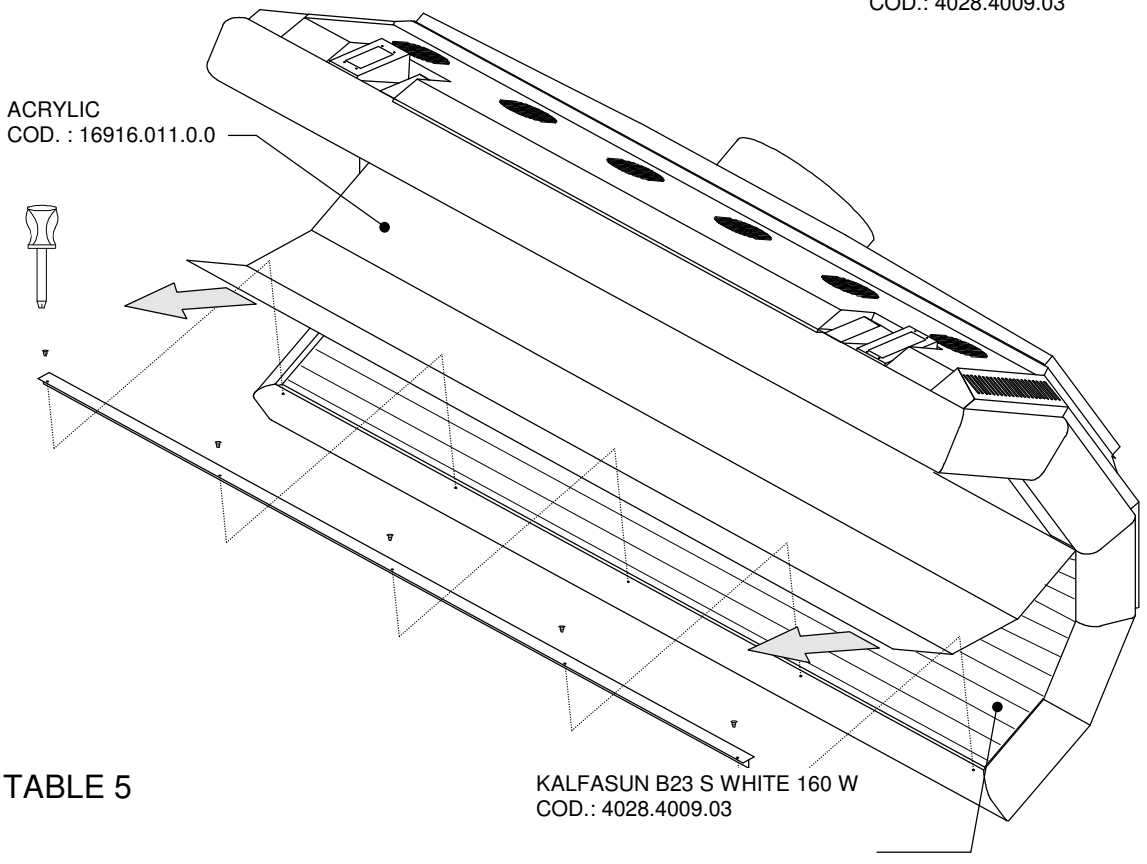

TABLE 5

REPLACING THE HOT AIR EXHAUST FAN

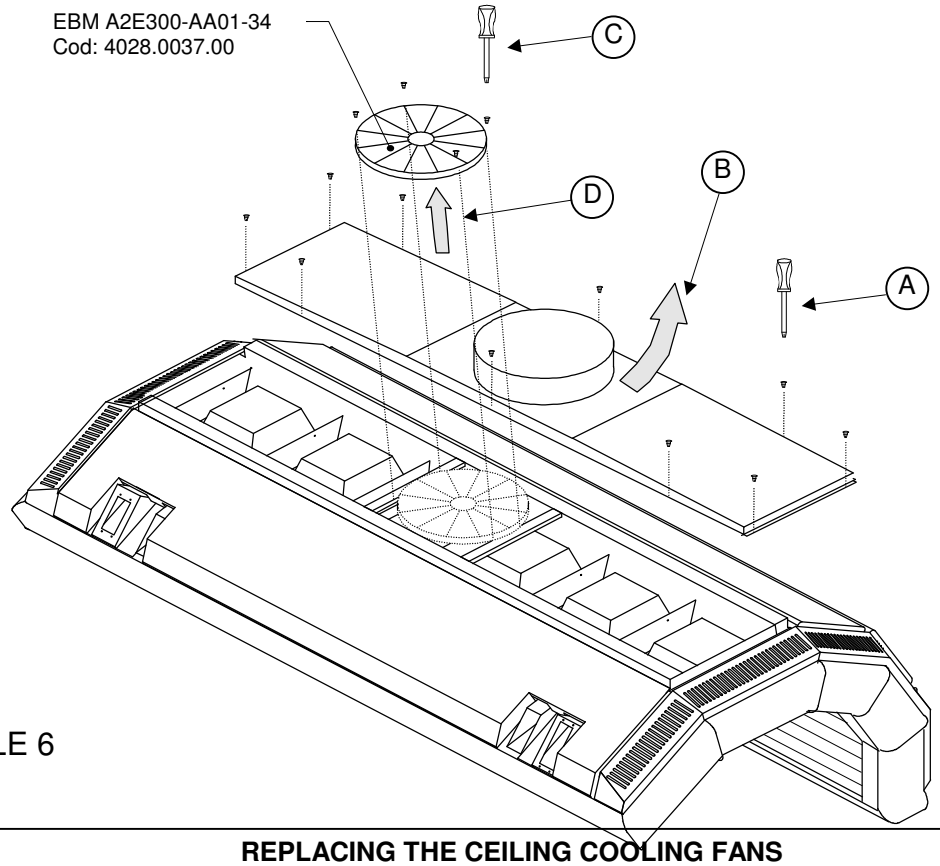

TABLE 6

REPLACING THE CEILING COOLING FANS

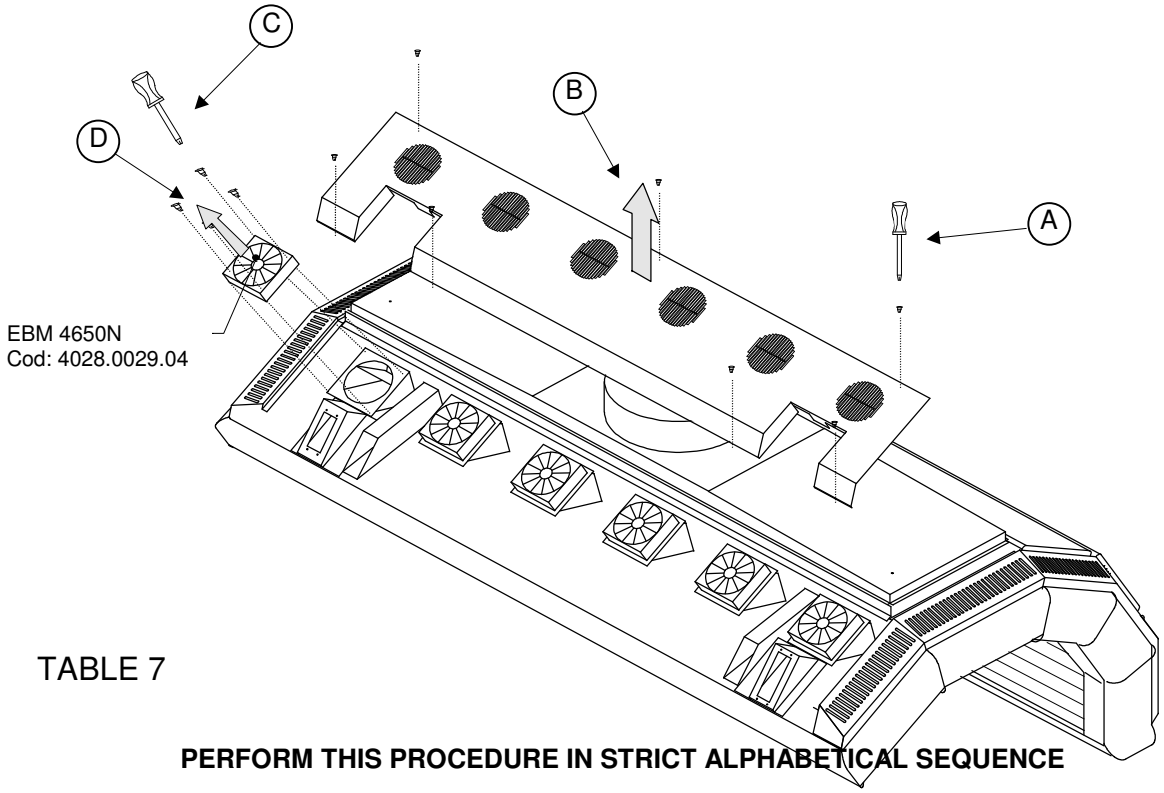

TABLE 7

PERFORM THIS PROCEDURE IN STRICT ALPHABETICAL SEQUENCE

REPLACING THE CEILING LAMPS AND REFLECTORS

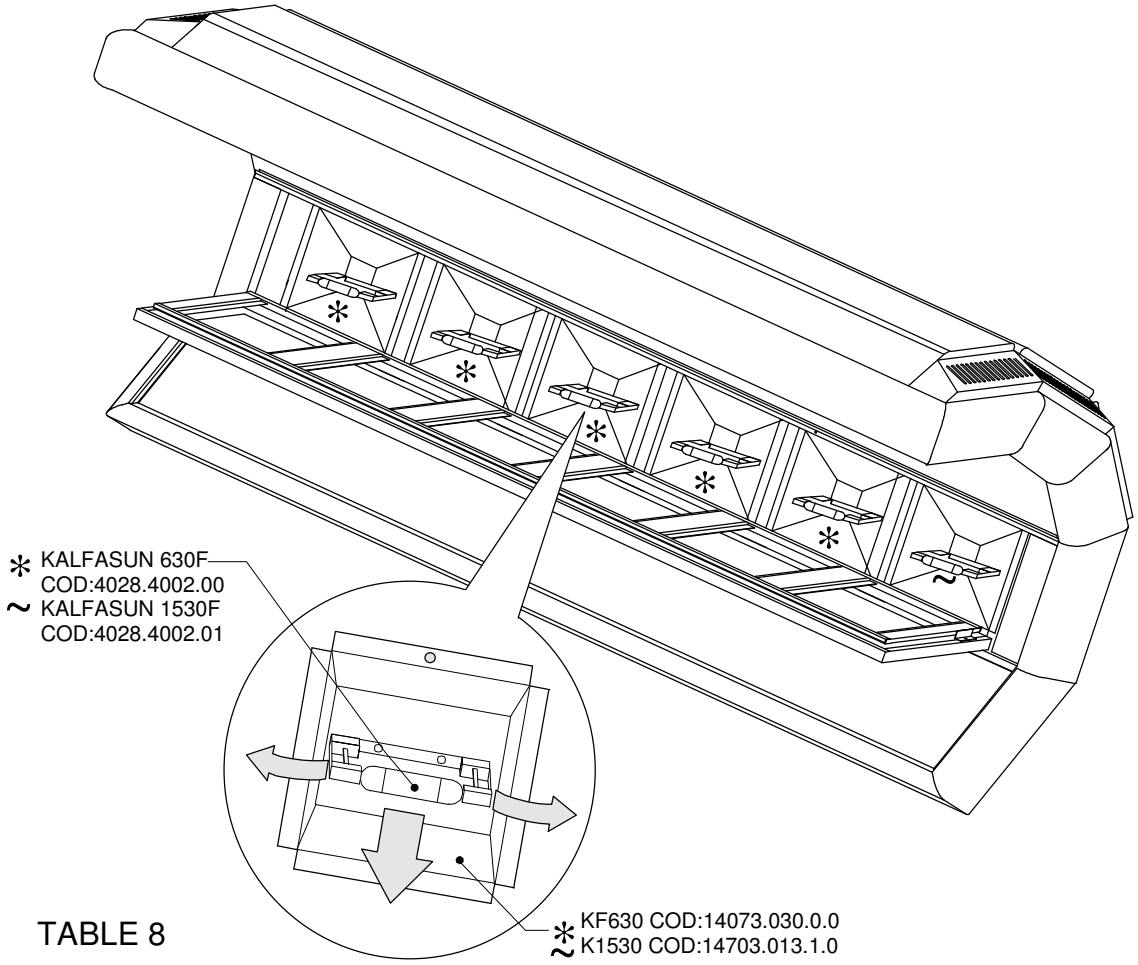

TABLE 8

REPLACING THE LATERAL LAMPS AND REFLECTORS

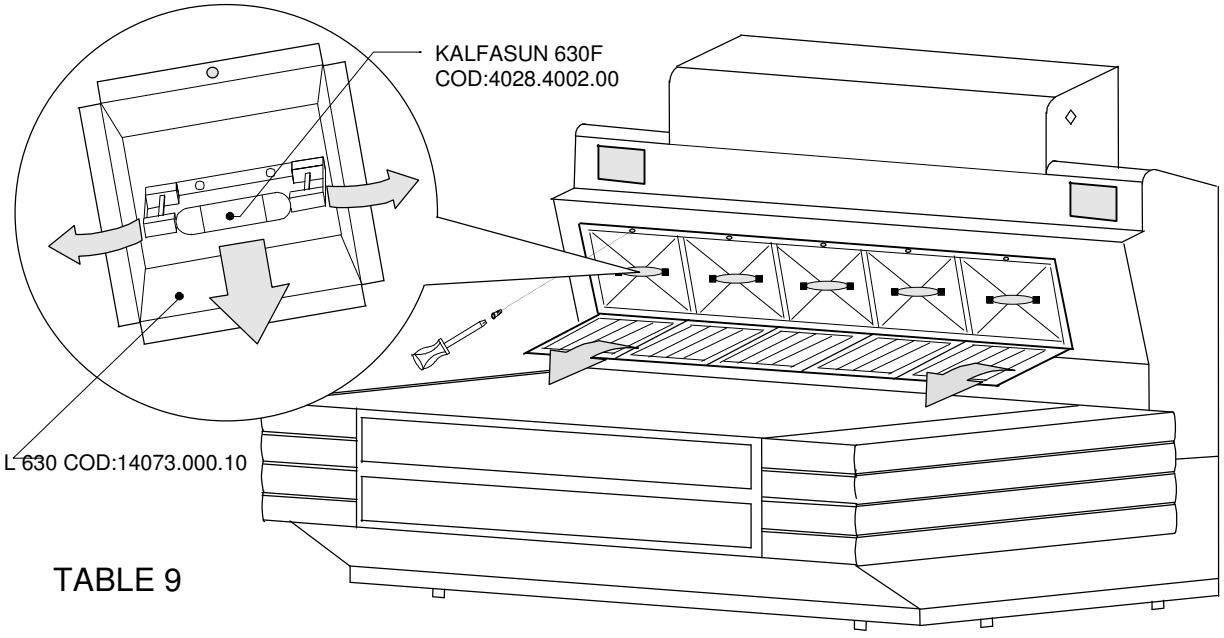

TABLE 9

PERFORM THIS PROCEDURE IN STRICT ALPHABETICAL SEQUENCE

ACTUATOR SUBSTITUTION FOR LOWERING THE CEILING

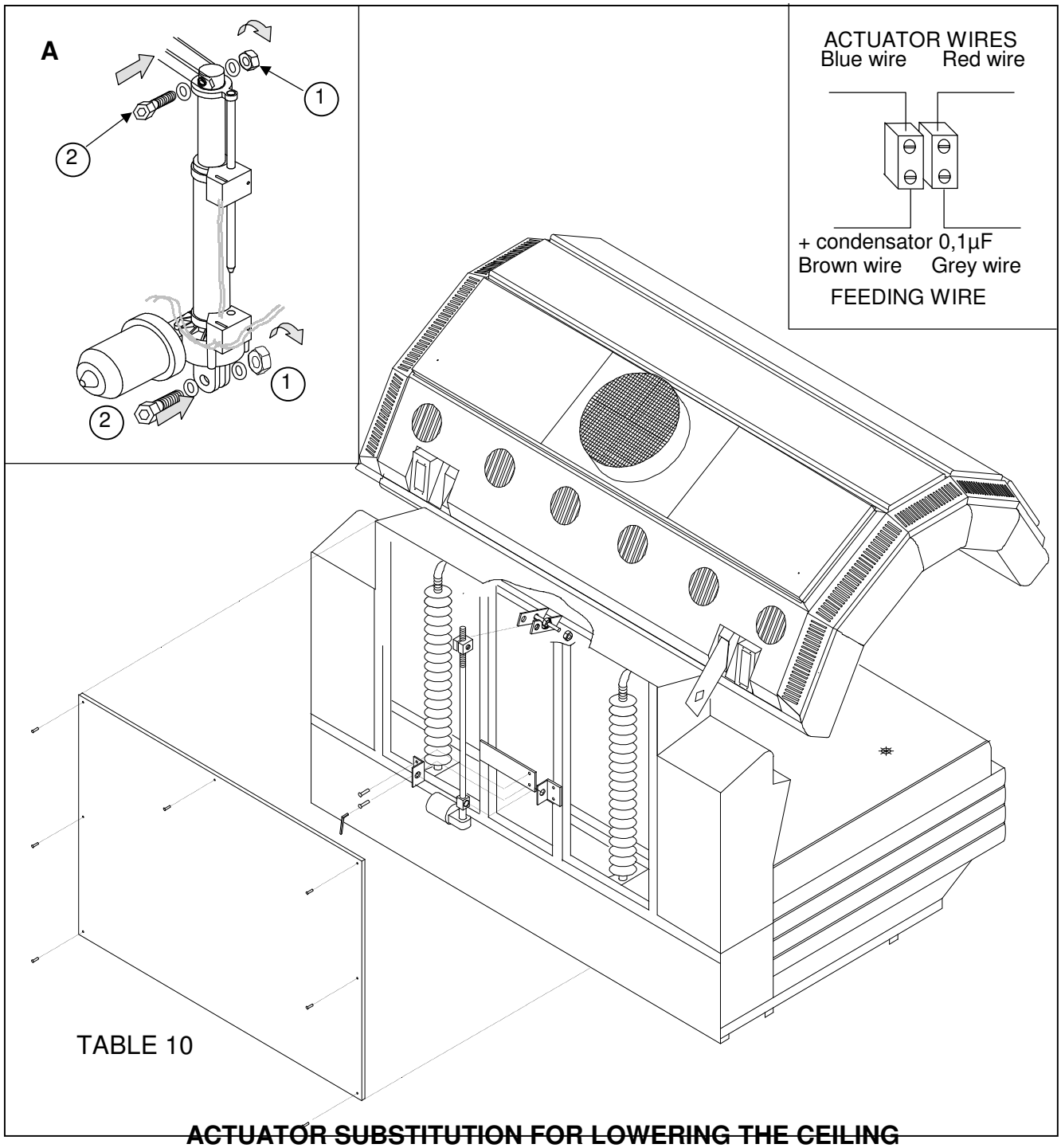

TABLE 10

ACTUATOR SUBSTITUTION FOR LOWERING THE CEILING

- Remove the n° 7 screws and remove panel from the lateral.
- Disconnect from the terminal board the feeding wires of the motor of the actuator.
- Support the ceiling.
- Unscrew the block 1 and act on block 2 to release the screw nut. (detail A).
- Unscrew the two allen screws M6x20 and release the actuator.
- Replace the actuator with an approved original spare part.
- To assemble the part act the opposite procedure, by paying attention to connect the feeding wires of the motor to the terminal board, as shown in detail (red wire, blue wire).

4.7 KOMBI 1000 SPARE PARTS LIST

N.REF	N:Pc.	CODE	DESCRIPTION
1	6	4028.0029.04	EBM 4650N FAN
2	4	4028.0040.03	EV TGO 60/1 FAN
3	1	4028.0040.01	EV TGA 60/1 FAN
4	5	14073.030.0.0	KF 630 REFLECTOR
5	1	14703.013.1.0	K 1530 REFLECTOR
6	10	4028.4002.00	KALFASUN 630F 230V UV-A LAMP
7	1	4028.4002.01	KALFASUN 1530F 230V UV-A LAMP
8	10	4028.4400.04	TRIDONIC ZRM6 ES-B IGNITOR
9	1	4028.4400.03	TRIDONIC ZRM12 ES-B IGNITOR
10	10	4028.1000.02	MYSUN 630 220/230/240V
11	1	4028.1000.04	1000W 9.5A FEEDER
12	20	4028.1001.04	160W 60HZ FEEDER
13	20	4028.4009.03	KALFASUN B23-S WHITE 160W LAMP
14	20	4028.3310.01	NEON HOLDER WITH STARTER HOLDER ART. 254/C
15	20	4028.3310.00	NEON HOLDER ART. 254/S
16	20	4028.4020.03	STARTER PHILIPS S12
17	2	4028.5510.00	ST 18/3 S PLUG
18	2	4028.5630.00	ST 18/3 B1 SOCKET
19	22	16976.004.0.0	COBALT FILTER (DIMENSIONS 230 X 75)
20	5	16976.008.0.0	SUPERLUX TR-T 29X23,5 FILTER
21	1	16976.010.0.0	TMP 4MM 29X23,5 FILTER
22	6	16976.002.0.0	KALFALUX TR-T 26X21 FILTER
23	1	16916.012.0.0	ACRYLIC KOMBI 1000
24	1	16916.011.0.0	ACRYLIC 2 KOMBI 1000
25	6	4028.4300.00	65µF 250V CONDENSER
26	1	4028.4307.00	5µF 400V CONDENSER
27	2	4028.0018.05	FANDIS 4715 FAN
28	1	4028.0037.00	EBM A2E300-AA01-34 FAN
29	1	4028.2100.10	FANTINI E COSMI HR 46 CONTACTOR
30	1	4028.2101.01	IR 11 AUXILIARY CONTACT
31	1	4028.4500.01	FINDER 60.13 RELAY
32	1	4028.4550.01	UNDECAL RELAY SOCKET
33	2	4028.3122.00	LEGRAND 39086 FUSE-HOLDER
34	1	4027.3020.16	12V 1.2AH ACCUMULATOR
35	1	4026.0010.00	RCT/1 ELECTRONIC CARD
36	1	4028.1010.11	220-230 /30V 60VA TRANSFORMER
37	1	4027.5010.00	26MB60 DIODE BRIDGE
38	1	4028.6000.01	REVALCO HOUR-COUNTER
39	1	14703.018.0.0	AL-12 FEEDER U
40	1	4026.0015.00	ASM/1 ELECTRONIC CARD
41	1	4027.0010.04	ACTUATOR ALI3
42	1	4028.2120.06	E83C 40 AEG BREAKER
43	1	16960.008.0.0	TRACTION SPRING
44	5	14073.000.1.0	L 630 REFLECTOR
45	1	14703.013.0.0	VENTILATION BOX KOMBI 1000 TV 600
46	1	15916.001.0.0	KOMBI 1000 MATTRESS
47	1	14703.003.0.0	MPT/3 CONTROL BOARD COMPLETE
48	1	4027.3025.05	MAJESTIC RADIO
49	1	4026.3000.00	SLIDER POTENTIOMETER
50	1	4026.3001.00	KNOB FOR SLIDER POTENTIOMETER
51	2	4027.3030.03	LP 101 LOUDSPEAKER
52	2	4027.3010.14	MASKING PANEL FOR LOUDSPEAKERS
53	1	16916.049.0.0	HEAD-REST CUSHION FOR KOMBI 1000
54	1	4028.4502.03	55.32 RELAY FINDER
55	1	4028.4555.00	94.72 SOCKET FINDER
56	1	4028.0048.00	2GDS25.133/190LR FAN
57	22	16976.000.0.0	COBALT FILTER 250X75
58	1	16906.005.0.0	KEYBOARD
59	1	15906.026.0.0	JACK ELECTRONIC BOARD
60	1	4028.2300.01	MICROSWITCH CR5

4.8 TROUBLESHOOTING AND RAPID DIAGNOSTICS

- **The solarium does not switch on and the pushbutton display panel does not light.**

1 - Check the position of the lever on the overload cut-out switch.
2 - Check that the power supply terminal board is connected to the power supply. See "KOMBI 1000" n° 6/8 circuit diagrams.
3 - Check the fuses on the timer board " MPT/3".
4 - Check the voltage (230V ~) across terminals 1 and 2 on board "MPT/3". See "KOMBI 1000" n° 1/8 circuit diagram.

- **The display panel lights up but the solarium does not switch on when START is pressed.**

1 - Check the existing connection "bridge or remote control by token meter" across terminals 1 and 2 on connector "mg". See "KOMBI 1000" n° 1/8 circuit diagram.
2 - Switch the solarium off using the overload cut-out switch, wait 5 seconds and then switch on again.

- **The display panel lights up but when START is pressed the ventilation system only is switched on.**

1 - Check that remote control switch "HA" operate correctly. See “KOMBI 1000” n° 7/8 circuit diagram.
2 - Check the voltage 230V ~ across terminals 2 and 3 of the timer board " MPT/3". See "KOMBI 1000" n° 1/8 circuit diagram.

- **The display panel lights up but when START is pressed only the lamps switch on (no ventilation).**

1 - Check that remote control switch "RV" operates correctly. See "KOMBI 1000" n° 7/8 circuit diagram.
2 - Check the voltage 230V ~ across terminals 2 and 5 of the timer board " MPT/3". See "KOMBI 1000" n° 1/8 circuit diagram.

- **Body cooling system inoperative or cannot be regulated.**

1 - Check the voltage (variable up to a maximum of 230V ~) across terminals 2 and 6 of the timer board " MPT/3". See "KOMBI 1000" n° 1/8 circuit diagram.

- **One of the high-pressure lamp does not switch on.**

1 - Check for voltage on the wiring to the lamp. Check the ignitor and feeder of the lamp. See “KOMBI 1000” n° 2/8,3/8,4/8and 6/8 circuit diagrams.

WARNING: The central terminals of the igniters for the high-pressure lamps carry extremely high voltage.

- **One of the low-pressure lamp does not switch on.**

1 - Check for voltage on the wiring to the lamp. Check the starter and feeder of the lamp. See “KOMBI 1000” n° 4/8 and 5/8 circuit diagrams.

- **The ceiling section cannot be raised or lowered.**

1 - Check fuses "1F" and “2F”, which is located inside control cassette.
2 - Check that the primary of transformer “TM” carries a voltage of 230V ~, and that the secondary carries 30V ~. See "KOMBI 1000" n° 7/8 circuit diagram.
3 - Check that the output of the diode bridge "PD" carries 30Vcc. See "KOMBI 1000" n° 7/8 circuit diagram.
4 - Check that circuit board "RCT-1", motor "MS" and circuit board " MPT/3" function correctly. See "KOMBI 1000" n° 1/8 and 7/8 circuit diagrams.

- **The ceiling section cannot be raised or lowered in case of power failure.**

1 - Check that the standby battery "BA" is charged.
2 - Check that circuit board "RCT-1" functions correctly.
3 - Check the voltage 24Vcc across terminals 9 and 10 of the terminal board “CN.CO”. See "KOMBI 1000" n° 1/8 and 7/8 circuit diagrams.

- **The radio does not work.**

1 - Check that the output of the power supply module "AR" carries 12Vcc. See "KOMBI 1000” n° 7/8 circuit diagram.

5 - CIRCUIT DIAGRAMS

USA

5.1 CIRCUIT DIAGRAMS LEGEND

SIMBOLS	*DESCRIPTION*	*CODE*
⏚	Earth terminal	
1AT-20AT	Ballast for KALFASUN B23-S White 160 Wlamps	**4028.1001.04**
1C-2C-3C…	65µF 400V condenser	**4028.4300.00**
1F	Fuse 1 A	
2F	Fuse 4 A	
AC1	Ignites for KALFASUN 630F lamps	**4028.4400.04**
AC2	Ignites for KALFASUN 1530F lamp	**4028.4400.03**
AR	Power supply circuit board for 12Vdc radio	**14703.018.0.0**
ASM-1	Control circuit board for massage unit	**4026.0015.00**
BA	Storage batteries (12V 1.2 Ah)	**4027.3020.16**
CA	06-pin connector for Ballast cassette	
CL	5µF 450V condenser	**4028.4307.00**
CN.1	16-pin connector for upper section	
CN.2	10-pin connector for lateral cassette	
CN.3	16-pin connector for ballast cassette	
CN.4	16-pin connector for timer circuit board	
CN.5	24-pin connector for upper section	
CN.6	16-pin connector for lateral cassette	
CN.7-8	3-pin Wieland connector	
CO	Hour-counter	**4028.6000.01**
HA	Remote control switch for lamps	**4028.2100.10**
INT.M	On/off massage switch	**4028.2300.01**
L	Lamps for KALFASUN B23-S White 160W	**4028.4009.03**
L1	KALFASUN 630F lamps	**4028.4002.00**
L1- L2- L3	Overload cut-out switch	
L2	KALFASUN 1530F lamp	**4028.4002.01**
Le	On - off massage warning light (LED)	
LSP-RSP	Headphones	**4027.3030.03**
M	Motor massage	
MA	Power supply terminal board	
MB	Base terminal board	
Mg	Terminal board for coin meter and remote control unit	
ML	Lateral terminal board	
MS	30Vdc up/down motor	
MT-1-2	Head terminal board	
N	Neutral terminal	
PD	Current rectifier bridge for up/down motor	**4027.5010.00**
R	Control relays for a N.O. contact of a coinbox	**4028.4502.03**
RA	Radio	**4027.3025.05**
RA-RB….	Ballast for KALFASUN 630F lamps	**4028.1000.02**
RCT	Circuit board for battery-charger and automatic control of ascent RCT/1	**4026.0010.00**
RF	Feeder for KALFASUN 1530F lamp	**4028.1000.04**
RM	Manual intensity massage regulation	**4026.3000.00**
RV	Remote control switch for fan	**4028.4500.01**
SCHEDA JACK	Circuit board for headphones	**15906.026.0.0**
SE4	"MPT/3" timer circuit board	**14703.003.0.0**
TE	Overload cut-out switch	**4028.2120.06**
TM	Power transformer for up/down motor 230/30Vac	**4028.1010.11**
V-V1	Cassette fans	**4028.0018.05**
V2	Upper section fan	**4028.0037.00**
VC	Cooling fan for body	**4028.0048.00**
VL	Cooling fan for lateral lamps	**4028.0040.01** **4028.0040.03**
VT	Upper section fan	**4028.0029.04**
W	3-pin Wieland connector white	

DESCRIPTION CIRCUIT DIAGRAMS

1/8 Practical diagram of control panel.
2/8 Practical diagram lateral cassette.
3/8 Practical diagram of lateral.
4/8 Practical diagram of head.
5/8 Practical diagram of head cassette.
6/8 Practical diagram of power.
7/8 Practical diagram of control.

ATTENZIONE:
PER EFFETTUARE IL CAMBIO TENSIONE DA 400V–3N~ A 230V–3~ ELIMINARE IL PONTE METALLICO PRESENTE SOPRA I MORSETTI (COLLEGAMENTO DEI NEUTRI)

ATTENZIONE:
PER EFFETTUARE IL CAMBIO TENSIONE IN 400V–3N~ E 230V–3~ AGGIUNGERE I MORSETTI DI ALIMENTAZIONE COME MOSTRATO QUI SOTTO

WARNING:
TO MAKE VOLTAGE FROM 400V–3N ~ TO 230V–3 ~ REMOVE THE METAL BRIDGE UPON TERMINALS (NEUTRAL CONNECTIONS)

WARNING:
TO CHANGE TENSION 400V–3N ~ AND 230V–3 ~ ADD THE FEEDING TERMINAL SEE PICTURE BELOW

230V–3~

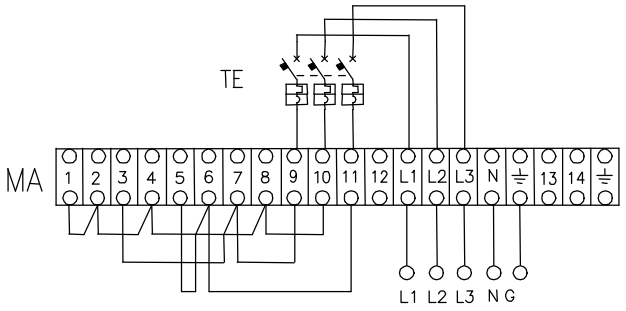

400V–3N~

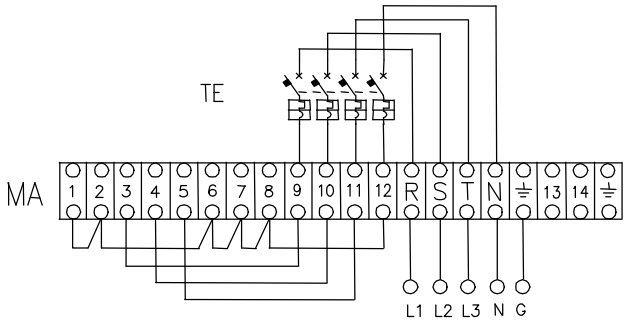

230V–~

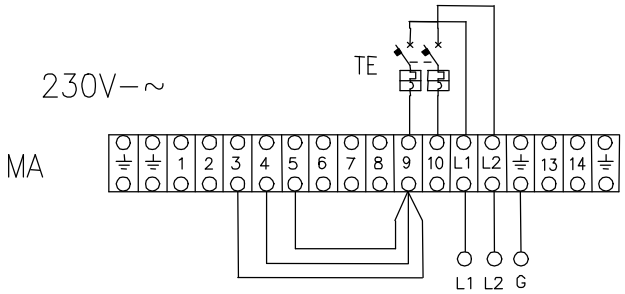

SPORTARREDO S.p.A Via dell'Industria, 7 30020 GRUARO (VE) tel. 0421/767630 - fax 767635 PROPRIETA' RISERVATA DELLA DITTA SPORTARREDO E'vietato riprodurre o comunicare a terzi il contenuto del presente disegno	DESCRIZIONE: SCHEMA CAMBIO TENSIONE VOLTAGE CHANGE DIAGRAM - - -				Modello: KOMBI 1000 USA
					Schema: n° 1/8
					Data: 30/10/01
CODICE: 10299.011.4.0 (230V 60HZ) 10297.007.4.0 (230V 3F 60HZ) - -	Rif	Modifiche	Data	Firma	Dis: B.Biason
	1	-	-	-	Contr.: -
	2	-	-	-	File: K1us_1.dwg

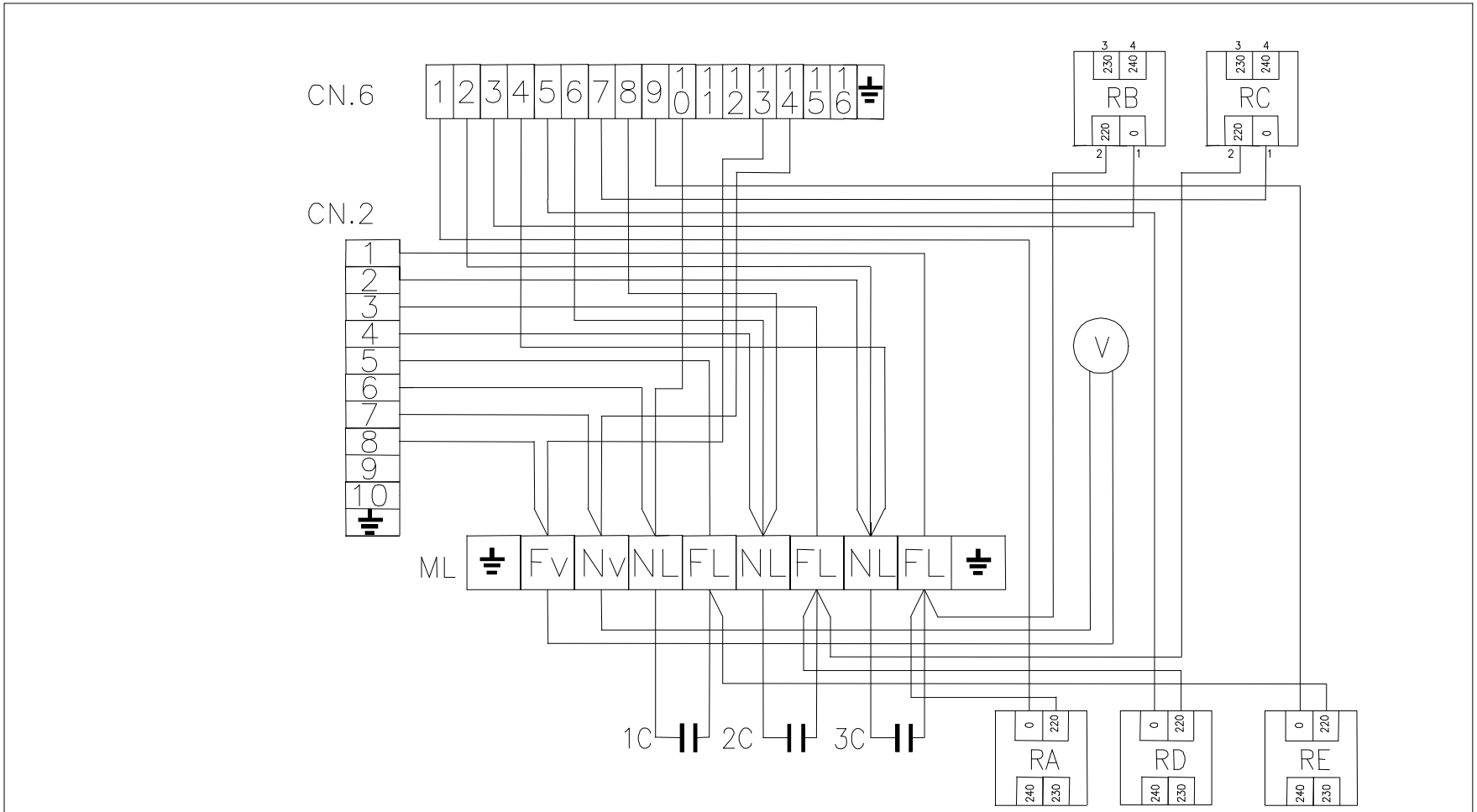

SPORTARREDO S.p.A Via dell'Industria, 7 30020 GRUARO (VE) tel. 0421/767630 - fax 767635 PROPRIETA' RISERVATA DELLA DITTA SPORTARREDO E' vietato riprodurre o comunicare a terzi il contenuto del presente disegno	DESCRIZIONE: PRATICAL DIAGRAM LATERAL CASSETTE - - - -				Modello: KOMBI 1000 USA Schema: n° 2/8 Data: 30/10/01
CODICE: 10299.011.4.0 (230V 60Hz) 10297.007.4.0 (230V 3F 60Hz) - -	Rif	Modifiche	Data	Firma	Dis: B.Biason Contr.: - file: K2us.dwg
	1	-	-	-	
	2	-	-	-	

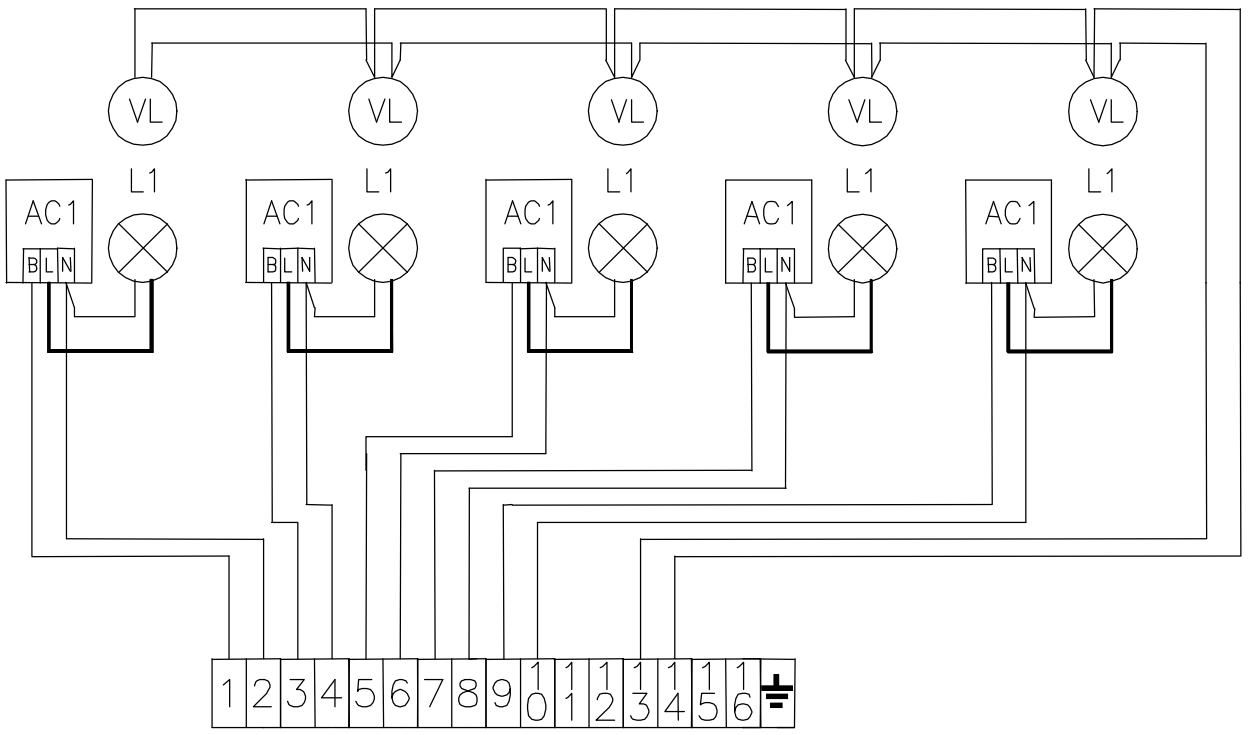

SPORTARREDO S.p.A Via dell'industria, 7 30020 GRUARO (VE) tel. 0421/767630 - fax 767635 PROPRIETA' RISERVATA DELLA DITTA SPORTARREDO E' vietato riprodurre o comunicare a terzi il contenuto del presente disegno	DESCRIZIONE: PRATICAL DIAGRAM OF LATERAL - - - -				Modello: KOMBI 1000 USA Schema: n° 3/8 Data: 30/10/01
CODICE: 10299.011.4.0 (230V 60Hz) 10297.007.4.0 (230V 3F 60Hz) - -	Rif	Modifiche	Data	Firma	Dis: B.Biason
	1	-	-	-	Contr.: -
	2	-	-	-	File: K3us.dwg

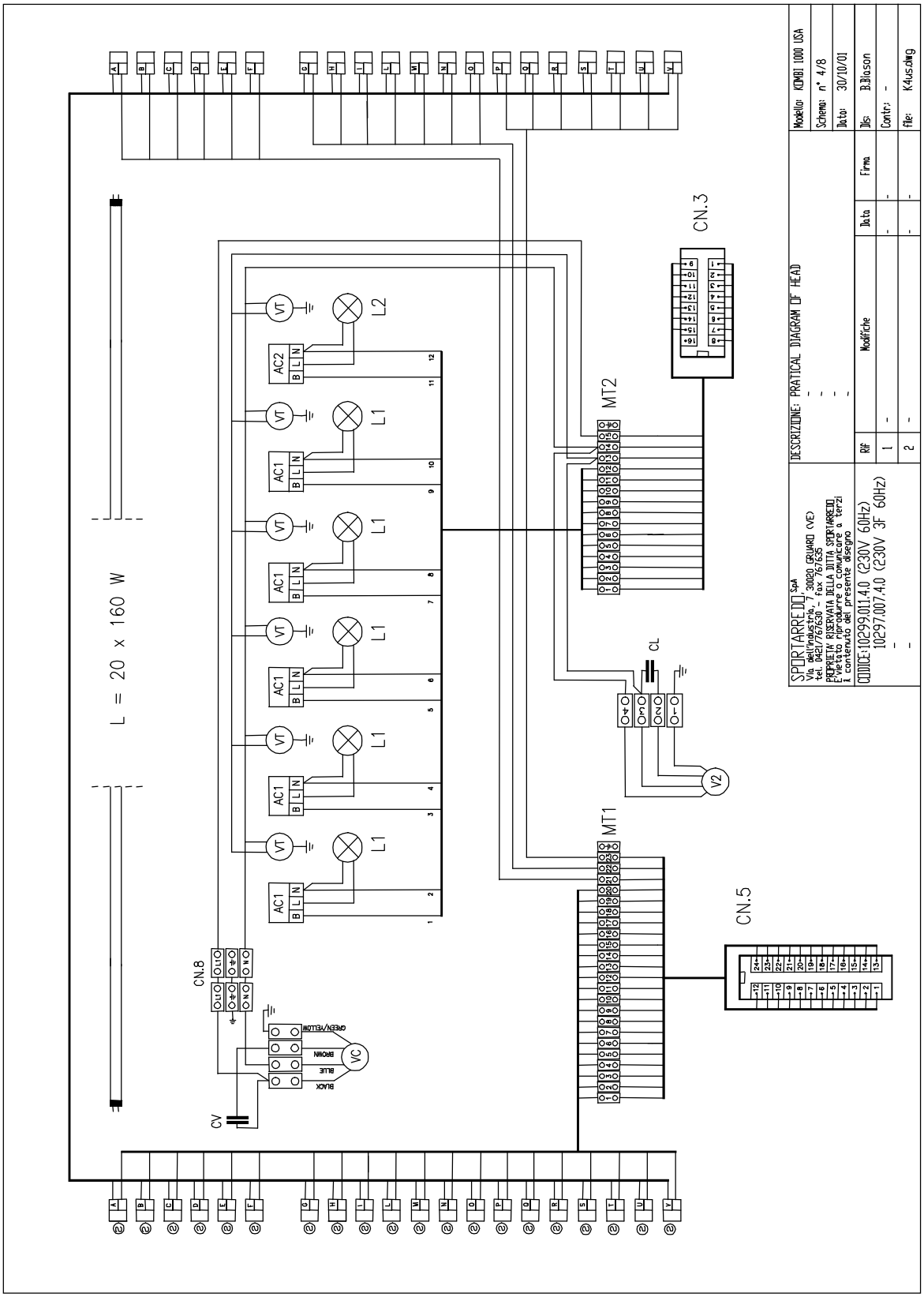
L = 20 x 160 W
CN.3
CN.5
CN.8
MT1
MT2
L1
L2
AC1
AC2
VT
VC
V2
CV
CL
BLACK
BLUE
BROWN
GREEN/YELLOW
SPORTARREDI SpA
DESCRIZIONE: PRATICAL DIAGRAM OF HEAD
Modello: KOMBI 1000 USA
Schema: n° 4/8
Data: 30/10/01
Modifiche
Rif
Data
Firma
Dis: B.Biason
Contr: -
File: K4usa.dwg
CODICE:10299.011.4.0 (230V 60Hz)
10297.007.4.0 (230V 3F 60Hz)

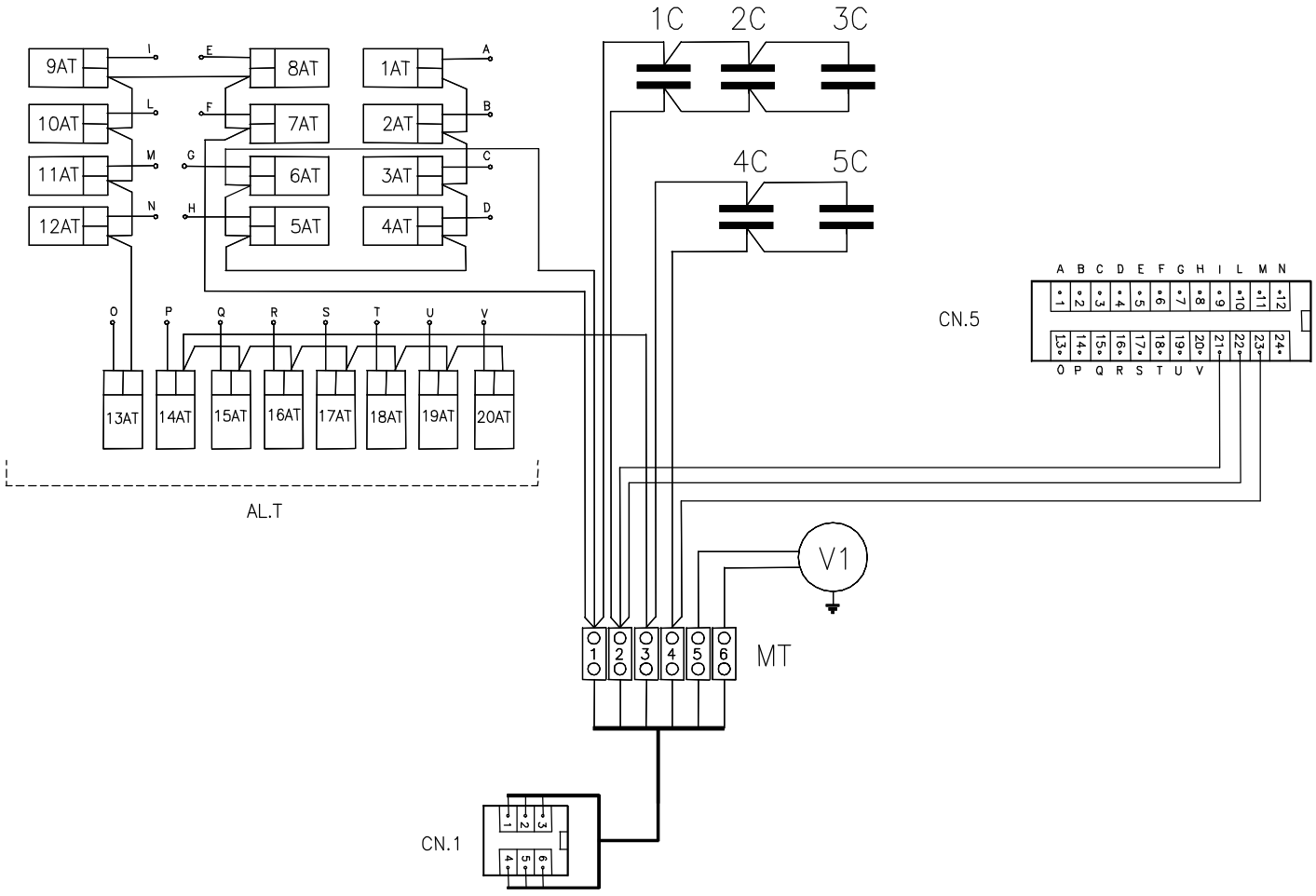

SPORTARREDO SpA Via dell'Industria, 7 30020 GRUARO (VE) tel. 0421/767630 - fax 767635 PROPRIETA' RISERVATA DELLA DITTA SPORTARREDO E' vietato riprodurre o comunicare a terzi il contenuto del presente disegno	DESCRIZIONE: PRATICAL DIAGRAM OF HEAD CASSETTE - - - -				Modello: KOMBI 1000 USA
					Schema: n° 5/8
					Data: 30/10/01
CODICE: 10299.011.4.0 (230V 60Hz) 10297.007.4.0 (230V 3F 60Hz) - -	Rif	Modifiche	Data	Firma	Dis: B.Biason
	1	-	-	-	Contr.: -
	2	-	-	-	file: K5us.dwg

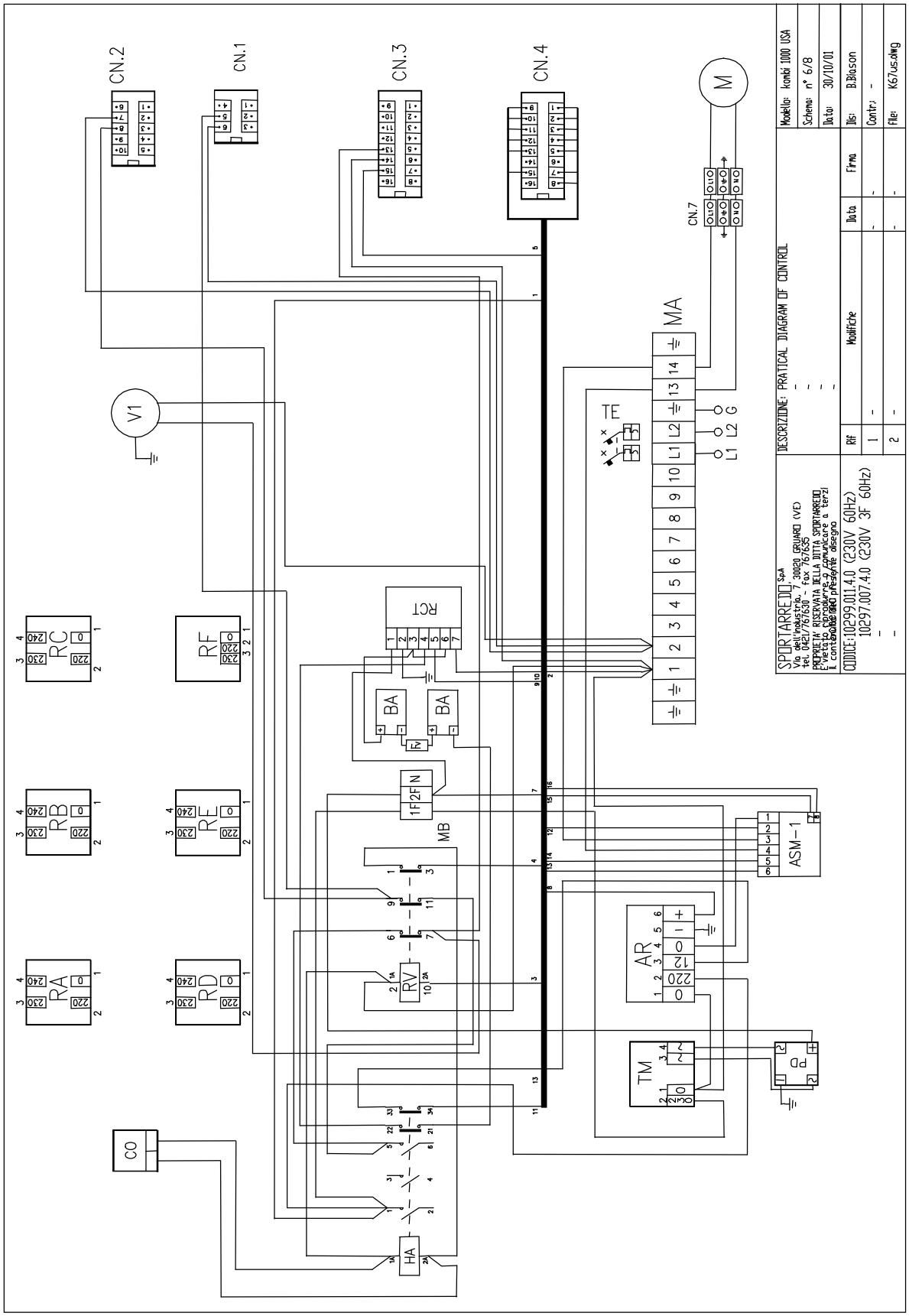
CN.2
CN.1
CN.3
CN.4
M
CN.7
MA
TE
V1
RC
RF
RB
RE
RA
RD
RCT
BA
BA
MB
RV
AR
TM
PD
ASM-1
CO
HA
SPORTARREDO SpA
Via dell'Industria, 7 30020 GRUARO (VE)
tel. 0421/767630 - fax 767635
PROPRIETA' RISERVATA DELLA DITTA SPORTARREDO
E' vietato riprodurre o comunicare a terzi
il contenuto del presente disegno
CODICE: 10299.011.4.0 (230V 60Hz)
10297.007.4.0 (230V 3F 60Hz)
DESCRIZIONE: PRATICAL DIAGRAM OF CONTROL
Modello: kombi 1000 USA
Schema: n° 6/8
Data: 30/10/01
Dis: B.Biason
Contr: -
File: K67us.dwg
Rif
Modifiche
Data
Firma

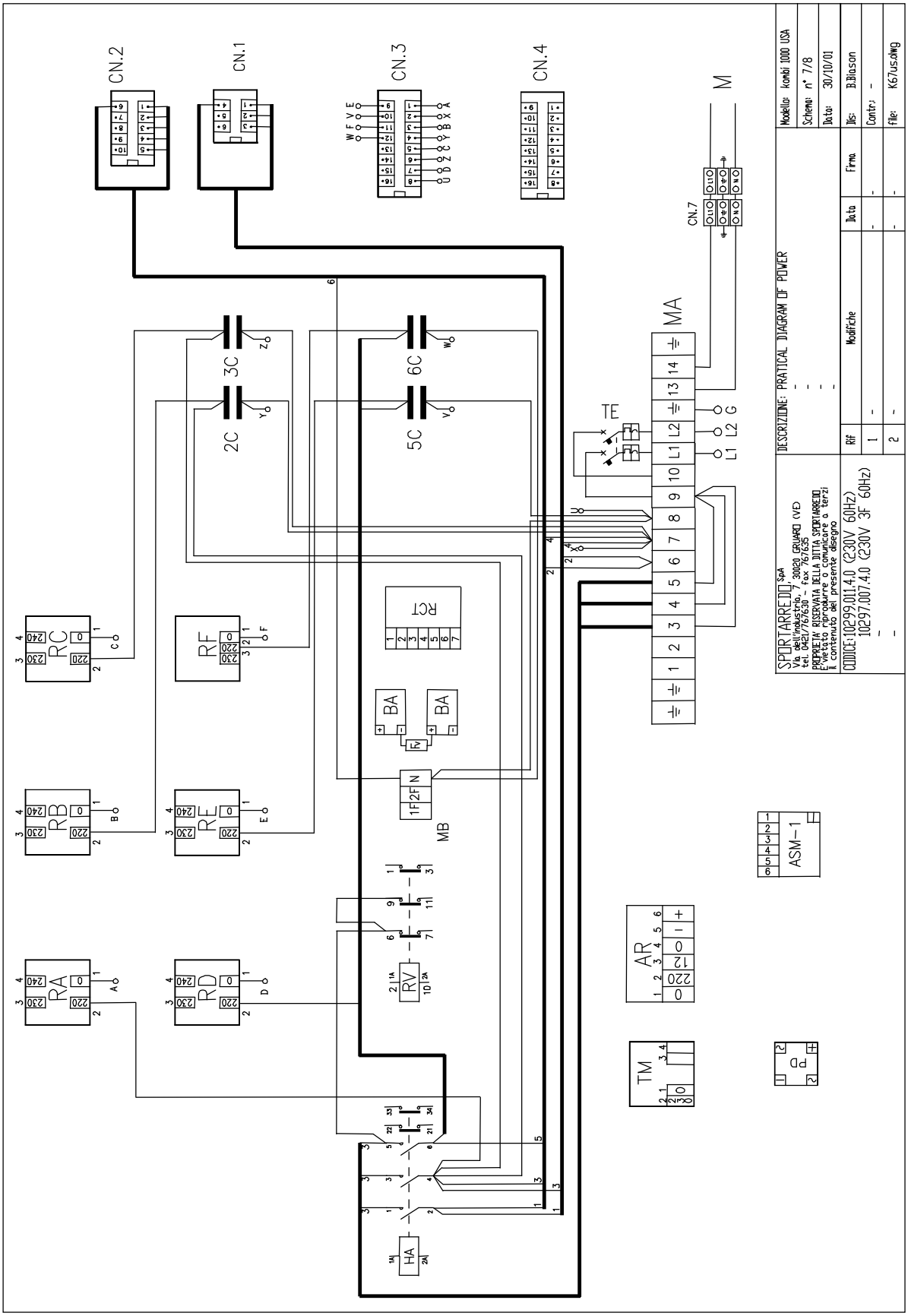
CN.2
CN.1
CN.3
CN.4
CN.7
M
MA
TE
3C
2C
6C
5C
RC
RB
RA
RF
RE
RD
RCT
BA
MB
RV
HA
AR
TM
PD
ASM-1
SPORTARREDO SpA
Via dell'Industria, 7 30020 GRUARO (VE)
tel. 0421/767630 - fax 767635
PROPRIETA' RISERVATA DELLA DITTA SPORTARREDO
E' vietato riprodurre o comunicare a terzi
il contenuto del presente disegno
CODICE:10299.011.4.0 (230V 60Hz)
10297.007.4.0 (230V 3F 60Hz)
DESCRIZIONE: PRATICAL DIAGRAM OF POWER
Modello: kombi 1000 USA
Schema: n° 7/8
Data: 30/10/01
Dis: B.Bianson
Contr: -
file: K67us.dwg
Rif
Modifiche
Data
Firma

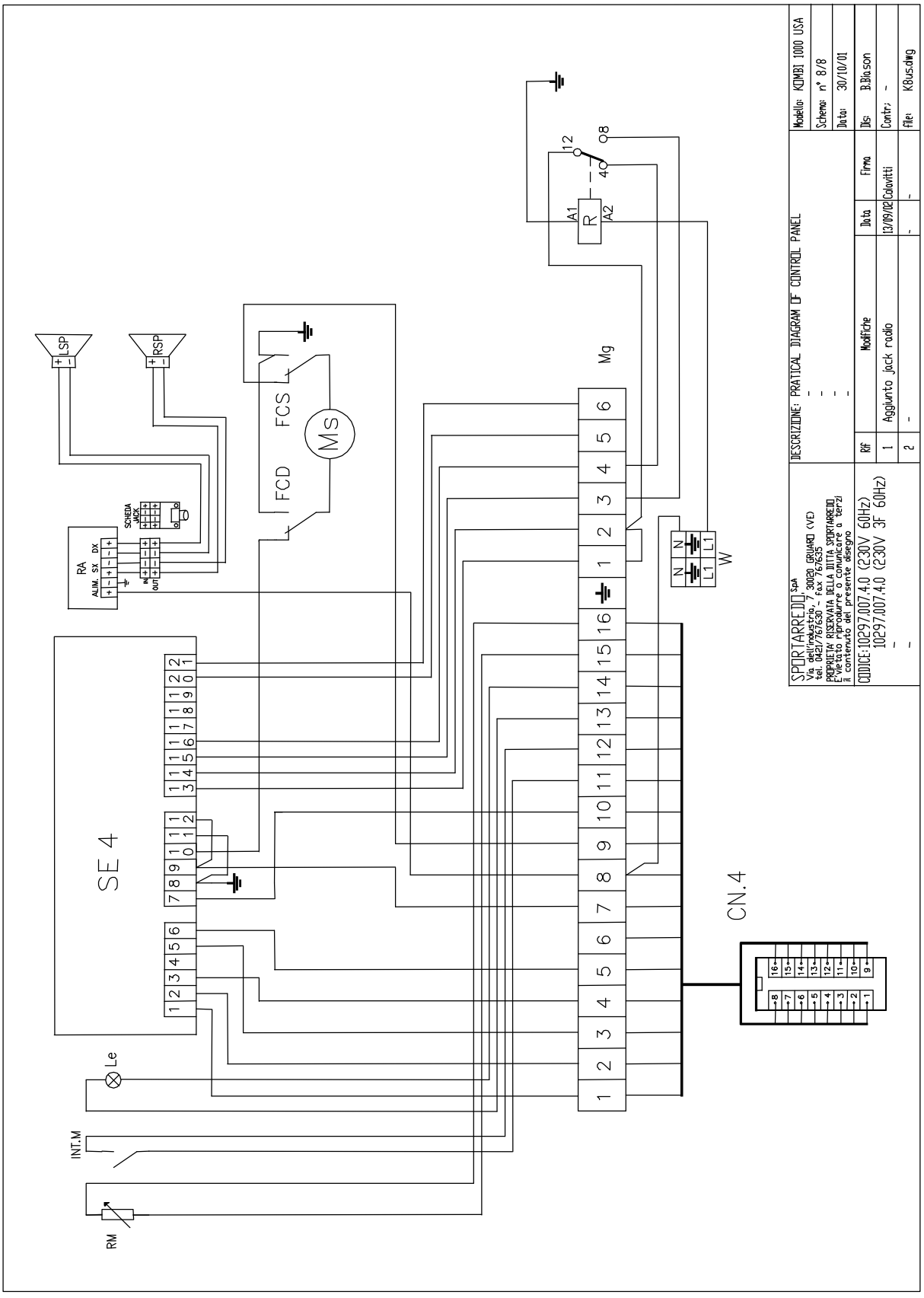
SE 4
CN.4
Mg
FCS
FCD
Ms
RA
ALIM. SX DX
SCHEDA JACK
IN
OUT
LSP
RSP
Le
INT.M
RM
W
N
L1
A1
A2
R
12
8
4
DESCRIZIONE: PRATICAL DIAGRAM OF CONTROL PANEL
Modello: KOMBI 1000 USA
Schema: n° 8/8
Data: 30/10/01
Dis: B.Bisson
Contr: -
file: K8us.dwg
Rif
Modifiche
Data
Firma
1
Aggiunto jack radio
13/09/02
Colavitti
2
SPORTARREDO SpA
Via dell'industria, 7 30020 GRUARO (VE)
tel. 0421/767630 - fax 767635
PROPRIETA' RISERVATA DELLA DITTA SPORTARREDO
E' vietato riprodurre o comunicare a terzi
il contenuto del presente disegno
CODICE:10297.007.4.0 (230V 60Hz)
10297.007.4.0 (230V 3F 60Hz)